Service Guide

Publication number 16500-97011
First edition, August 1994

For Safety information, Warranties, and Regulatory information, see the pages at the end of the book.

© Copyright Hewlett-Packard Company 1987 – 1994
All Rights Reserved.

HP 16500B/16501A
Logic Analysis System

HP 16500B/16501A Logic Analysis System

The HP 16500B is the mainframe of the Logic Analysis System, and the HP 16501A is the expansion frame. The HP 16500B/16501A is of modular structure using plug-in cards with a wide range of data acquisition and stimulus capabilities.

Features

Some of the main features of the HP 16500B/16501A are as follows:

- Modular mainframe with five card slots
- Expansion frame, which expands the total system card slots to ten
- Touchscreen user interface
- 86 Mbyte hard disk drive
- High-density 3.5-inch flexible disk drive
- Color monitor
- Intermodule triggering and time correlation of acquired data
- HP-IB, RS-232C or optional LAN interfaces for hardcopy output to a printer or controller interface

Service Strategy

The service strategy for this instrument is the replacement of defective assemblies. This service guide contains information for finding a defective assembly by testing and servicing the HP 16500B/16501A.

This instrument can be returned to Hewlett-Packard for all service work, including troubleshooting. Contact your nearest Hewlett-Packard Sales Office for more details.

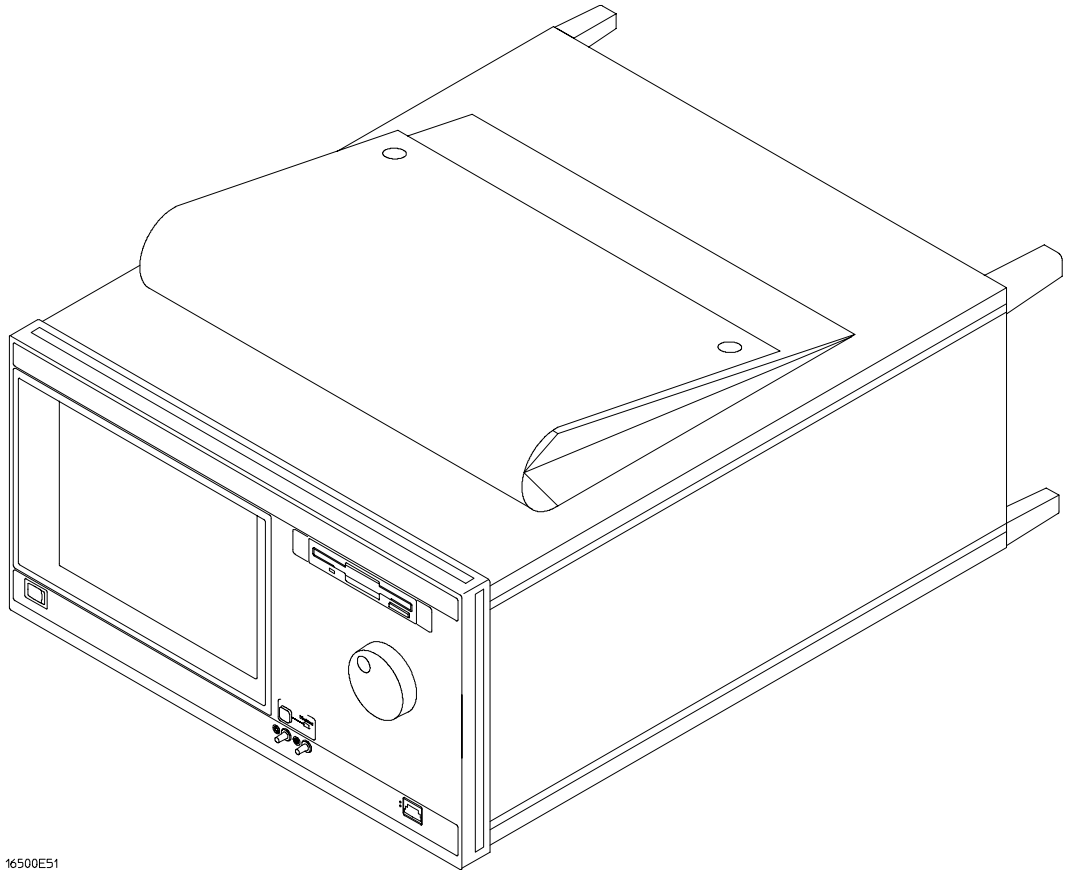

The HP 16500B Logic Analysis System

In This Book

This book is the service guide for the HP 16500B/16501A Logic Analysis System and is divided into eight chapters.

Chapter 1 contains information about the instrument and includes accessories for the instrument, specifications and characteristics of the instrument, and a list of the equipment required for servicing the instrument.

Chapter 2 tells how to prepare the instrument for use.

Chapter 3 gives instructions on how to test the performance of the instrument.

Chapter 4 contains calibration instructions for the instrument.

Chapter 5 contains self-tests and flowcharts for troubleshooting the instrument.

Chapter 6 tells how to replace the instrument and assemblies of the instrument, and how to return them to Hewlett-Packard.

Chapter 7 lists replaceable parts, shows an exploded view, and gives ordering information.

Chapter 8 explains how the instrument works and what the self-tests are checking.

This book also contains information about the HP 16500L interface module when using an expansion frame or an external monitor. For information about using the interface module with a local area network, refer to the manuals for the HP 16500L.

Contents

1 General Information

Accessories 1–2
Specifications 1–3
Characteristics 1–3
Recommended Test Equipment 1–6

2 Preparing for Use

To inspect the logic analysis system 2–2
To apply power 2–3
To operate the user interface 2–3
To set the line voltage 2–4
To degauss the display 2–5
To clean the logic analysis system 2–5
To test the logic analysis system 2–5
To install modules 2–6
To install the HP 16500L interface module 2–7
To connect the HP 16501A Expansion Frame 2–9
To connect an external monitor 2–10

3 Testing Performance

To perform the power-up tests 3–3
To perform the self-tests 3–4

4 Calibrating and Adjusting

To prepare the instrument 4–3
To access the test patterns 4–4
To adjust geometry 4–5
To adjust focus, landing, and convergence 4–6
To adjust white balance 4–13

5 Troubleshooting

To use the flowcharts 5–2
To check the power-up self-tests 5–18
To run the self-tests 5–19
To check the video signals 5–22
To check the power supply LEDs 5–23
To check the power supply voltages 5–24
To test the flexible disk drive voltages 5–25
To test the hard disk drive voltages 5–27
To test the expansion frame interface 5–29

6 Replacing Assemblies

To remove and replace the
- Optional modules or filler panels 6–3
- Covers 6–4
- Flexible disk drive 6–5
- Power supply 6–6
- Rear fan 6–8
- Side fan 6–9
- HP 16500L interface module 6–10
- Hard disk drive 6–12
- Microprocessor board (CPU) 6–13
- SIMM memory 6–14
- Expansion interface board 6–15
- Mother board 6–16
- Front-panel board 6–18
- Color display assembly 6–19

To return assemblies 6–22

7 Replaceable Parts

Replaceable Parts Ordering 7–2
Replaceable Parts List Description 7–3
HP 16500B Exploded View and Replaceable Parts 7–4
HP 16501A Exploded View and Replaceable Parts 7–9

8 Theory of Operation

Block-Level Theory 8–3
The HP 16500B Logic Analysis System 8–3
The Microprocessor Board 8–6

The Power-Up Routine 8–9
The Power-Up Screen 8–9
Power-Up Self-Tests 8–10
Power-Up Tasks 8–10
The System Configuration Menu 8–12

Self-Tests Description 8–13
Power-Up Self-Tests 8–13
Functional Performance Verification Tests 8–15

HP-IB 8–18

RS-232C 8–19

1

Accessories 1–2
Specifications 1–3
Characteristics 1–3
Recommended Test Equipment 1–6

General Information

General Information

This chapter lists the accessories, the specifications and characteristics, and the recommended test equipment.

Accessories

The following accessories are supplied with the HP 16500B/16501A Logic Analysis System.

Accessories Supplied	Qty
Training Kit	1
Setting Up The System Guide	1
User's Reference	1
Programming Reference	1
Service Guide	1
RS-232C Loopback Connector	1
Power cord	1
Disk pouch containing backup composite software	1
Feeling Comfortable With Logic Analyzers	1
Feeling Comfortable with Digitizing Oscilloscopes	1
Filler Panels	Quantity depends on how many modules are ordered with the HP 16500B/16501A

Accessories Available

Other accessories available for the HP 16500B/16501A Logic Analysis System are listed in the *Accessories for HP Logic Analyzers* brochure.

Specifications

The specifications are the performance standards against which the product is tested. There are no specifications for the HP 16500B or the HP 16501A.

Characteristics

These characteristics are not specifications, but are included as additional information. The following characteristics are typical for the HP 16500B/16501A system.

Hard Disk Drive

Capacity 86 Mbyte unformatted; Formatted as a Microsoft DOS disk drive IDE Interface Bus.

Flexible Disk Drive

Capacity 1.44 Mbyte formatted Microsoft DOS or LIF supported.

Programmability

Instrument settings and operating modes, including automatic measurements, may be remotely programmed via RS-232C, HP-IB (IEEE-488), or optional HP 16500L (Ethernet).

Hardcopy Output

Printers Supported HP ThinkJet, HP QuietJet, HP LaserJet, HP PaintJet, HP Deskjet, HP Deskjet C, Epson and Epson-compatible (for example, Epson FX-80) via RS-232C or HP-IB.

RS-232C Configurations Protocols: XON/XOFF, Hardware; Data bits: 8; Stop bits: 1, 1 1/2, 2; Parity: none, odd, or even; Baud rates: 110, 300, 600, 1200, 2400, 4800, 9600, 19200.

HP-IB Interface Functions SH1, AH1, T5, TE0, L3, LE0, SR1, RL1, PP1, DC1, DT1, C0 and E2.

Input/Output Rear Panel BNCs:

Port-in User selectable: TTL, ECL or user defined; Zin = 4 kΩ ; Maximum Vin = -6.0 V at 1.5 mA to +6 V at 1.6 mA.

Port-out Output signal is active high, TTL output level, high > 2 V into 50 Ω, low < 0.4 V into 50 Ω.

Intermodule Bus (IMB) Characteristics

Run Control Oscilloscope, timing, state, and pattern generation can be armed by Group Run. Modules can run concurrently or be armed in series. Each module can arm one or more modules.

Mixed Display Mode Any timing or oscilloscope waveform displays can be mixed. State listings can be included with waveforms in the State/Timing Mixed Mode display.

Acquiring Data for Mixed Displays To obtain a mixed display, multiple modules must be armed through the IMB. To include state listings in mixed mode displays, state time tagging must be on.

Time Interval Accuracy Between Modules Equals the sum of the channel-to-channel time interval accuracies of each module used in the measurement, for a deskewed measurement.

Time Correlation Resolution 2 ns (500 MHz).

Operating Environment

Temperature

Instrument 0 °C to 50 °C (+32 °F to 122 °F).
Disk Media 10 °C to 40 °C (+50 °F to 104 °F).
Probes and Cables 0 °C to 65 °C (+32 °F to 149 °F).

Humidity

Instrument up to 95% relative humidity at 40 °C (104 °F).
Disk media and hard drive 8% to 80% relative humidity at 40 °C (104 °F).

Altitude Up to 4600 m (15 000 ft). Hard drive to 300 m (10,000 ft.).

Vibration

Operating Random vibration 5-500Hz, 10 minutes per axis, ~ 2.41 g (rms).
Non-operating Random vibration 5-500Hz, 10 minutes per axis, ~ 2.4 g (rms); and swept sine resonant search, 5-500Hz, 0.75g (0-peak), 5 minute dwell at 4 resonances per axis.

Weight

HP 16500B

Net 18.1 kg (40 lbs) + [0.7 kg (1.6 lbs) x number of optional cards installed].
Shipping 25.9 kg (57 lbs) + [3.6 kg (8 lbs) x number of optional cards installed].

HP 16501A

Net 12.2 kg (27 lbs) + [0.7 kg (1.6 lbs) x number of optional cards installed].
Shipping 19.9 kg (44 lbs) + [3.6 kg (8 lbs) x number of optional cards installed].

Power Requirements

HP 16500B 115 V/230 V, -22% to +10%, 48 to 66 Hz, 475 W max.

HP 16501A 115 V/230 V, -22% to +10%, 48 to 66 Hz, 420 W max.

Dimensions Refer to the following figure for dimensional detail.

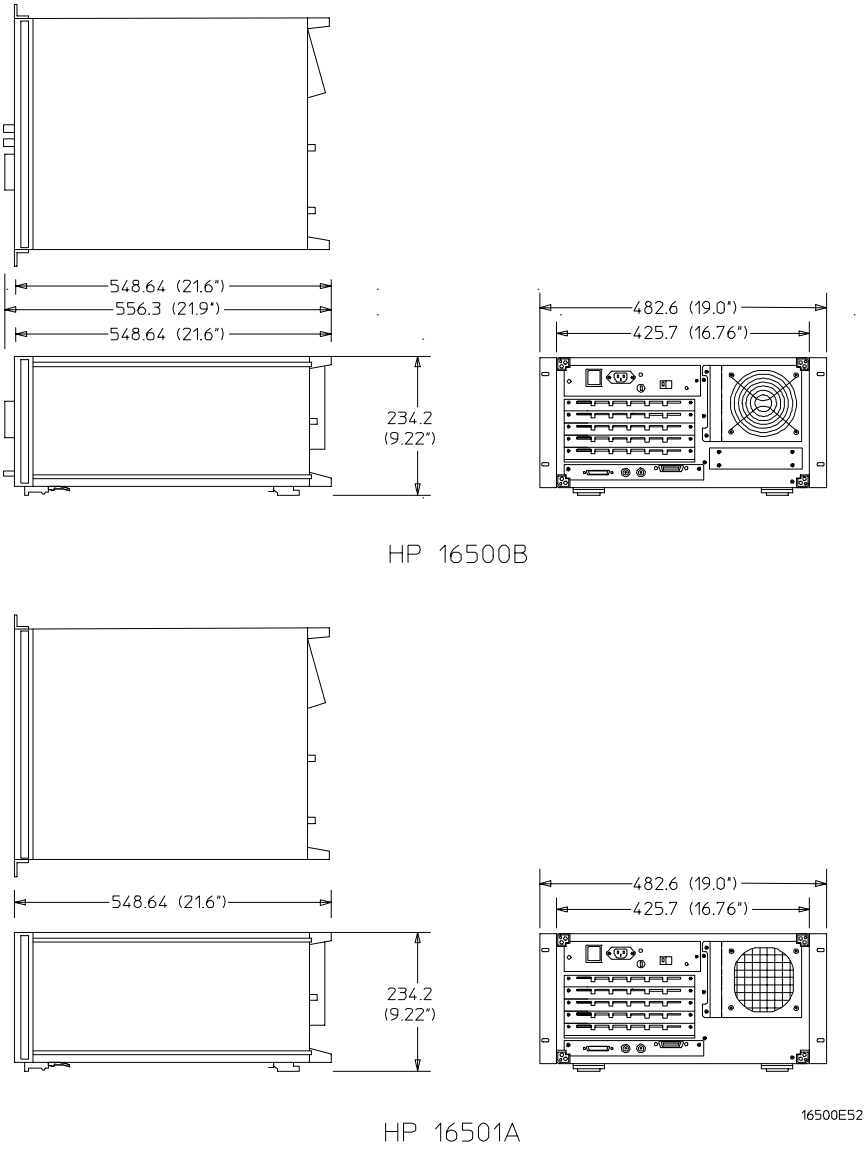

Dimensional Detail

Recommended Test Equipment

Equipment Required

Equipment	Critical Specifications	Recommended Model/Part	Use*
Oscilloscope	100 MHz Bandwidth	HP 54600A	T
Voltmeter		HP 3478A	T
RS-232C Loopback Connector		HP Part Number 01650-63202	T

*A = Adjustment P = Performance Tests T = Troubleshooting

2

To inspect the logic analysis system 2–2
To apply power 2–3
To operate the user interface 2–3
To set the line voltage 2–4
To degauss the display 2–5
To clean the logic analysis system 2–5
To test the logic analysis system 2–5
To install modules 2–6
To install the HP 16500L interface module 2–7
To connect the HP 16501A Expansion Frame 2–9
To connect an external monitor 2–10

Preparing for Use

Preparing For Use

This chapter gives you instructions for preparing the logic analysis system for use.

Power Requirements

The logic analysis system mainframe requires a power source of either 115 Vac or 230 Vac, –22 % to +10 %, single phase, 48 to 66 Hz, 475 W maximum power.

The logic analysis system expansion frame requires a power source of either 115 Vac or 230 Vac, –22 % to +10 %, single phase, 48 to 66 Hz, 420 W maximum power.

Operating Environment

The operating environment is listed in chapter 1. Note the noncondensing humidity limitation. Condensation within the instrument can cause poor operation or malfunction. Provide protection against internal condensation.

The logic analysis system will operate at all specifications within the temperature and humidity range given in chapter 1. However, reliability is enhanced when operating it within the following ranges:

- Temperature: +20 °C to +35 °C (+68 °F to +95 °F)
- Humidity: 20% to 80% noncondensing

Storage

Store or ship the logic analysis system in environments within the following limits:

- Temperature: -40 °C to + 75 °C
- Humidity: Up to 90% at 65 °C
- Altitude: Up to 15,300 meters (50,000 feet)

Protect the system from temperature extremes which cause condensation on the instrument.

To inspect the logic analysis system

1 Inspect the shipping container for damage.

If the shipping container or cushioning material is damaged, keep them until you have checked the contents of the shipment and checked the instrument mechanically and electrically.

WARNING Hazardous voltages exist in this instrument. To avoid electrical shock, do not apply power to a damaged instrument.

2 **Check the supplied accessories.**

Accessories supplied with the logic analysis system are listed in "Accessories" in chapter 1.

3 **Inspect the product for physical damage.**

Check the logic analysis system and the supplied accessories for obvious physical or mechanical defects. If you find any defects, contact your nearest Hewlett-Packard Sales Office. Arrangements for repair or replacement are made, at Hewlett-Packard's option, without waiting for a claim settlement.

To apply power

1 **Check that the line voltage selector, located on the rear panel, is on the correct setting and the correct fuse is installed.**

See also, "To set the line voltage" in this chapter.

2 **Connect the power cord to the instrument and to the power source.**

This instrument is equipped with a three-wire power cable. When connected to an appropriate ac power outlet, this cable grounds the instrument cabinet. The type of power cable plug shipped with the instrument depends on the country of destination. Refer to chapter 7, "Replaceable Parts," for option numbers of available power cables.

3 **Turn on the instrument line switch located on the rear panel, then turn on the power standby switch located on the front panel.**

To operate the user interface

- **To select a field on the mainframe screen, use the touchscreen.**

  For more information about the logic analysis system interface, refer to the *HP 16500B/16501A Logic Analysis System User's Reference.*

- **To set the HP-IB address or to configure for RS-232C, refer to the *HP 16500B/16501A Logic Analysis System User's Reference.***

To set the line voltage

When shipped from HP, the line voltage selector is set and an appropriate fuse is installed for operating the instrument in the country of destination. To operate the instrument from a power source other than the one set, perform the following steps.

1. Turn the front panel power switch to the STBY position, then turn the power switch to the Off position. Remove the power cord from the instrument.
2. Replace the main fuse with a 5 A/250 V fuse for 230 V operation, or a 10 A/125 V fuse for 115 V operation.
3. Set the rear panel line select switch for the desired voltage.
4. Reconnect the power cord, turn on the rear panel power switch, then continue normal operation.
5. If your system includes an HP 16501A Expansion Frame, repeat this procedure for it.

   The expansion frame has only one power switch, and that switch is located on the rear panel.

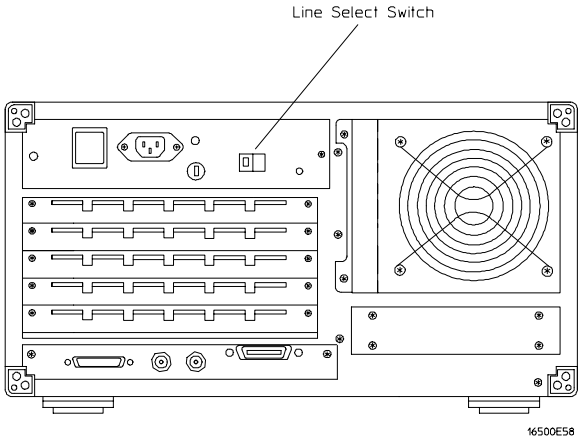

Line Voltage Selection

To degauss the display

- If the mainframe has been subjected to strong magnetic fields, the CRT might become magnetized and display data might become distorted. To correct this condition, degauss the CRT with a conventional, external-television-type degaussing coil.

To clean the logic analysis system

- With the instrument turned off and unplugged, use mild soap and water to clean the front and cabinet of the system. Harsh soap might damage the water-base paint.

To test the logic analysis system

The logic analysis system does not require calibration or adjustment.

- If you require a test to initially accept the operation, perform the self-tests in chapter 3, "Testing Performance."
- If the logic analysis system does not operate correctly, go to the beginning of chapter 5, "Troubleshooting."

To install modules

The following steps give general instructions for installing modules into the mainframe or the expansion frame of the system.

CAUTION Electrostatic discharge can damage electronic components. Use grounded wriststraps and mats when performing any service to modules.

1. **Turn off the frame power switch, then unplug the power cord. Disconnect any input or output connections.**
2. **Plan your module configuration.**

   Refer to the manuals of individual modules for configuration information.
3. **Loosen the thumb screws.**

   Cards or filler panels below the slots intended for installation do not have to be removed.

   Starting from the top, loosen the thumb screws on filler panels and cards that need to be moved.
4. **Starting from the top, pull the cards and filler panels that need to be moved halfway out.**

   All multicard modules will be cabled together. To prevent damage to the cables and connectors, pull these cards out together.
5. **Remove the cards and filler panels.**

   Remove the cards or filler panels that are in the slots intended for the module installation.

   Some modules for the logic analysis system require calibration if you move them to a different slot. Refer to the manuals of individual modules for calibration information.
6. **Install the module.**

   You may need to push all other cards into the card cage, but not completely in, to get them out of the way for installing the module.

   Refer to the manuals of individual modules for cabling information.
7. **Slide the complete module into the frame, but not completely in.**

   Each card is firmly seated and tightened one at a time in step 9.
8. **Position all cards and filler panels so that the endplates overlap.**
9. **Seat the cards and tighten the thumbscrews.**

   Starting with the bottom card, firmly seat the cards into the backplane connector of the mainframe. Keep applying pressure to the center of the card endplate while tightening the thumbscrews finger-tight. Repeat this for all cards and filler panels starting at the bottom and moving to the top.

CAUTION For correct air circulation, filler panels must be installed in all unused card slots. Correct air circulation keeps the instrument from overheating. Keep any extra filler panels for future use.

10. **Plug in the system, then turn it on.**

    When you turn on the power switch, the logic analysis system performs power-up tests. After the power-up tests are complete, the screen will show your system configuration.

See Also Service Guides for the individual modules.

To install the HP 16500L interface module

The HP 16500L interface module is required to connect the HP 16501A Expansion Frame to the HP 16500B mainframe.

WARNING Hazardous voltages exist on the power supply, the CRT, and the CRT driver board of the HP 16500B mainframe. To avoid electrical shock, disconnect the power from the instrument before performing the following procedures. After disconnecting the power, wait at least six minutes for the capacitors on the power supply board and the CRT driver board to discharge before servicing the instrument. However, if the AC LED on the power supply has any illumination, a significant charge remains on the power supply capacitors.

CAUTION Electrostatic discharge can damage electronic components. Use grounded wriststraps and mats when performing any service to this module or to the HP 16500B Logic Analysis System.

For correct orientation of the cables, match the slots on the cable connectors and on the board connectors.

1. Remove power from the HP 16500B mainframe, then remove the optional modules, the four rear feet, and the top and bottom covers of the mainframe.
2. Remove the sheetmetal plate on the rear of the mainframe covering the slot where the HP 16500L interface module will be installed.

   With the interface module installed, you will not use the plate. Save the plate to use in case the interface module is removed.
3. Remove the cable connecting the CRT module to the CPU board.

   To release the cable, push the tabs on the board connector to the outside of the connector.

   With the interface module installed, you will not use this cable. Save the cable to use in case the interface module is removed.

> If you need more room to replace the CRT cable, you can remove the hard disk drive. Removing the hard disk is not necessary, but gives you more room for replacing the CRT cable. The hard disk is connected with four screws.

4. Connect one end of the new 40-pin cable to the CRT module.

   Push the cable connector into the board connector until the tabs lock in the cable.

   If you removed the hard disk drive, replace it before going to the next step.

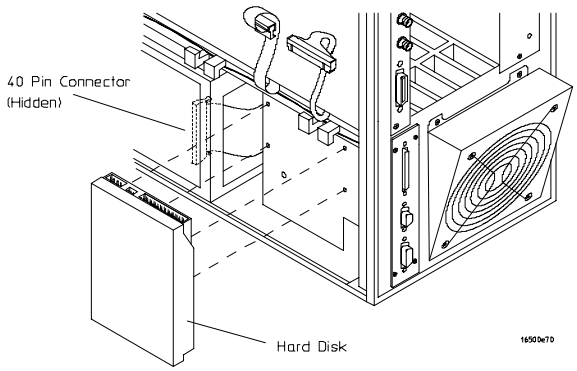

5 Slide the interface module into the mainframe through the slot in the rear panel.

6 Install the screws connecting the interface module to the mainframe.

Two screws through the top of the interface module connect it to the sheetmetal plate, and four screws through the rear plate of the interface module connect it to the rear panel of the mainframe.

7 Connect the end of the 40-pin CRT cable to the interface module.

8 Connect the 80-pin cable to the CPU board and to the interface module.

- **a** Slide the 80-pin cable halfway through the rear slot of the card cage between the interface module and the CPU board.
- **b** Connect the cable to the CPU board.
- **c** Connect the cable to the interface module.

9 Connect the 10-pin cable to the CPU board and to the interface module.

10 Replace the top and bottom covers, the optional modules, and the rear feet of the mainframe.

11 Turn on the system.

- **a** Connect a power cord to the frame.
- **b** Turn on the line switch located on the rear panel the frame.
- **c** Turn on the power standby switch located on the front panel of the mainframe.

When the power-up tests are complete, the mainframe screen shows "Ethernet" in the Communications menu.

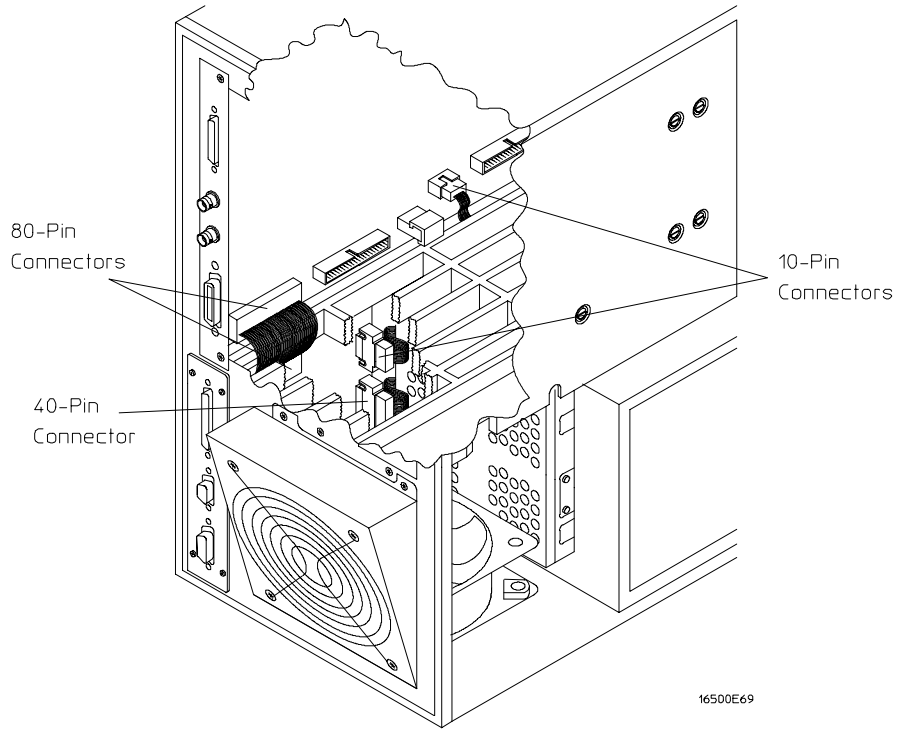

To connect the HP 16501A Expansion Frame

The HP 16501A Expansion Frame includes an interface cable and requires an HP 16500L interface module to connect to the HP 16500B mainframe. To install the expansion frame, you need to install the interface module into the mainframe, then connect the cable from the module to the expansion frame.

CAUTION Electrostatic discharge can damage electronic components. Use grounded wriststraps and mats when performing any service to this card.

1. Turn off the mainframe power switch, then unplug the power cord. Disconnect any input connections.
2. Verify that the line select switch located on the rear panel of the expansion frame is in the off position.
3. Install the HP 16500L interface module into the mainframe.

   The procedure for installing the HP 16500L is on page 2–7.
4. Connect the interface cable to the expansion frame and to the interface module in the mainframe.

   To ensure correct insertion, the 68-pin "D" connectors on each end of the interface cable are asymmetric in shape. They only fit into their respective ports on the cards when oriented to match the shape of the ports.

   When connecting the interface cable, you will hear two clicks. Make sure the cable connector is properly seated into the port by pulling the connector without pressing the release tabs. If the connector is properly seated, it will remain connected to the port.

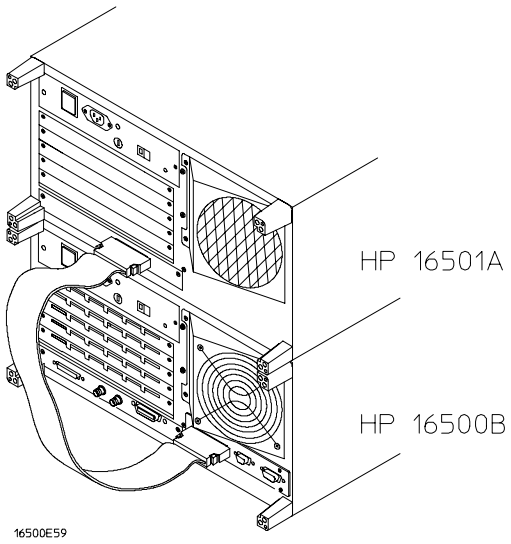

5. Turn on the system.
   - **a** Connect a power cord to each frame.
   - **b** Turn on the line switch located on the rear panel of each frame.
   - **c** Turn on the power standby switch located on the front panel of the mainframe.

   When the power-up tests are complete, the mainframe screen shows "Master Frame" in a blue field.

To connect an external monitor

The following tables define the signal available for external monitors at the HP 16500L connector and pin numbers.

HP 16500L Output Signal For External Monitors

Horizontal deflection (fh)	25.0 kHz
Vertical deflection (fv)	59.95 Hz
Resolution	576 x 368 x dots x lines (WxH)
RGB video	0.714 VP-P, positive
Impedance	75 ohm , analog
External Sync Signal	H TTL, negative 3.2 µS; W TTL, negative, 120 µS

Connector Pins

Pin number	Signal	Pin number	Signal
1	Red	6,7,8,10	Ground
2	Green	13	Horizontal Sync
3	Blue	14	Vertical Sync

1 Connect your monitor to the HP 16500L interface module installed into the HP 16500B mainframe.
2 If your monitor needs adjusting, follow the manufacturer's instructions.

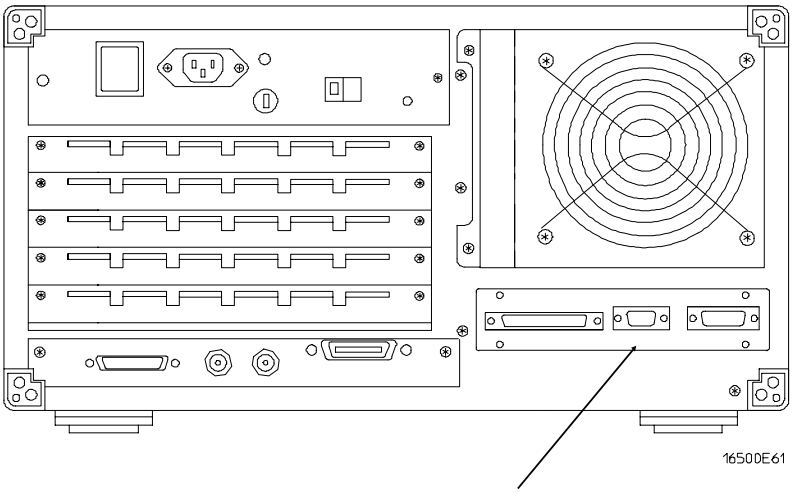

3

To perform the power-up tests 3–3
To perform the self-tests 3–4

Testing Performance

Testing Performance

To ensure the logic analysis system is operating correctly, you can perform software tests (self-tests) on the system. Directions for performing the software tests are given in this chapter.

This chapter normally tells you how to test the performance of the logic analysis system against the specifications listed in chapter 1. Because there are no specifications for the HP 16500B/16501A, there are no performance verification tests.

Self-Tests

The self-tests listed in this chapter check the functional operation of the mainframe and the expansion frame. Self-tests for the optional modules installed in the frames are listed in the individual module Service Guides.

There are two types of self-tests: self-tests that automatically run at power-up, and self-tests that you select on the screen. For descriptions of the tests, refer to chapter 8, "Theory of Operation."

Perform the self-tests as an acceptance test when receiving the logic analysis system or when the logic analysis system is repaired.

If a test fails, refer to chapter 5, "Troubleshooting."

Test Interval

There is no recommended test interval for the HP 16500B mainframe or the HP 16501A expansion frame. However, each of the HP 16500-series option modules has performance verification tests and therefore require a periodic verification of specifications. Refer to the Service Guides of the individual modules for more information.

The Logic Analysis System Interface

To select a field on the HP 16500B screen, use the touchscreen. For more information about the logic analysis system interface, refer to the *HP 16500B/16501A Logic Analysis System User's Reference*.

To perform the power-up tests

The logic analysis system automatically performs power-up tests when you apply power to the instrument. The revision number of the boot ROM shows in the upper-right corner of the screen during these power-up tests. As each test completes, either "passed" or "failed" prints on the screen in front of the name of each test.

1. **Disconnect all inputs, then insert a formatted disk into the flexible disk drive.**
2. **Let the instrument warm up for a few minutes, then cycle power by turning off then turning on the power switch.**

   If the instrument is not warmed up, the power-up test screen will complete before you can view the screen.
3. **As the tests complete, check if they pass or fail.**

   The Flexible Disk Test reports No Disk if a disk is not in the disk drive.

   If a power-up self-test fails, refer to chapter 5, "Troubleshooting."

Performing Power-Up Self-Tests

passed	ROM Test
passed	RAM Test
passed	Interrupt Test
passed	Display Test
passed	HIL Controller Test
passed	Front-Panel Test
passed	Touchscreen Test
passed	Correlator Test
passed	Hard Disk Test
passed	Flexible Disk Test

Loading Module Files

To perform the self-tests

The self-tests verify the correct operation of the logic analysis system. Self-tests can be performed all at once or one at a time. While testing the performance of the logic analysis system, run the self-tests all at once.

1 If you just did the power-up self-tests, go to step 2.

If you did not just do the power-up self-tests, disconnect all inputs, then turn on the power switch. Wait until the power-up tests are complete.

2 In the System Configuration menu, select Configuration, then select Test.

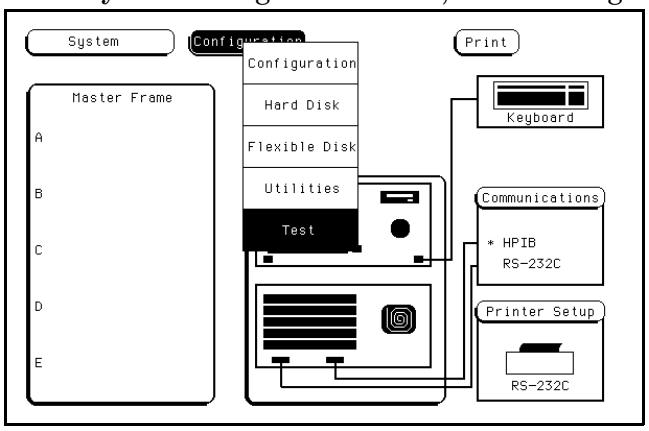

3 Select the box labeled Load Test System.

4 Select Test System, then select Mainframe Test from the pop-up menu.

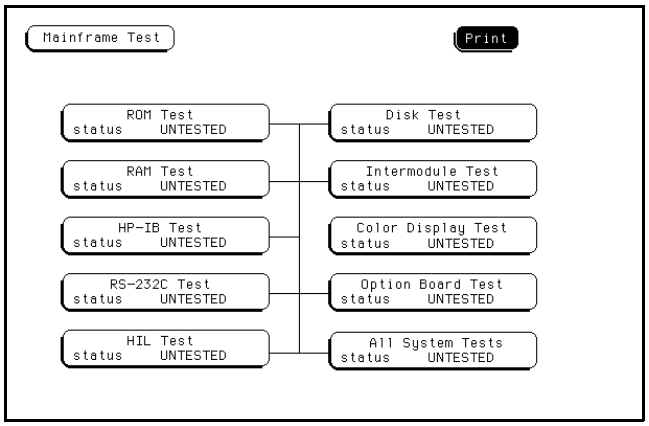

5 Install a formatted disk that is not write protected into the flexible disk drive. Connect an RS-232C loopback connector onto the RS-232C port.

6 Select All System Tests.

You can run all tests at one time by running All System Tests. To see more details about each test, you can run each test individually. This step shows how to run all tests at once.

The status of the tests will change from Untested to Passed or Failed. If a test fails, refer to chapter 5, "Troubleshooting."

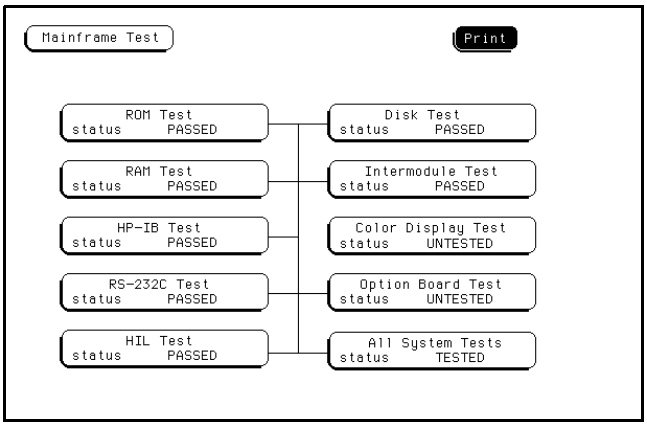

The Color Display Test is not normally needed. The screens are primarily used when the color display assembly requires adjusting. For the adjustment procedure, refer to chapter 4, "Calibrating and Adjusting."

7 Exit the mainframe tests.

a In the Mainframe Test menu, select Mainframe Test, then select Test System.

b Select Configuration, then select Exit Test in the pop-up menu.

c Select the field close to the center of the screen to exit the test system and to load the mainframe operating system.

After the operating system is loaded, the System Configuration menu is displayed.

4

To prepare the instrument 4–3
To access the test patterns 4–4
To adjust geometry 4–5
To adjust focus, landing, and convergence 4–6
To adjust white balance 4–13

Calibrating and Adjusting

Calibrating and Adjusting

This chapter normally gives you instructions for calibrating and adjusting the logic analysis system. Because the HP 16500B/16501A requires no calibration, only adjustment instructions are included.

Adjustments

The only adjustments to the logic analysis system are adjustments to the color CRT monitor assembly.

Use the following procedures to adjust the CRT module to compensate for magnetic influences causing misconvergence.

WARNING

Hazard voltages exist on the power supply, the CRT, and the CRT driver board. To avoid electrical shock, read and follow the Safety and Warning considerations at the end of this manual before performing adjustment procedures.

Adjustment Interval

DO NOT PERFORM THESE ADJUSTMENTS AS A PART OF ROUTINE CALIBRATIONS. The following procedures are provided only for the few extreme cases where either the earth's magnetic field or the user's environment cause an unusable display due to misconvergence that cannot be corrected by degaussing the entire CRT screen.

DO NOT perform the procedures in this chapter before first degaussing the CRT screen using the rear-panel degaussing switch. In extreme cases of magnetism, it may be necessary to degauss the CRT using a conventional external television-type degaussing coil.

Adjustment Personnel

It is recommended that these adjustments be performed only by qualified personnel who are familiar with color CRT convergence procedures.

Equipment Required

The instrument firmware supplies the display patterns necessary for adjustment. The only tool required is a nonmetallic adjustment tool:

- Sony Part Number 4-367-065-01
- HP Part Number 8710-1355

To prepare the instrument

1. Remove the rear feet and the covers from the mainframe.
2. Before starting the adjustments, mark the position where the potentiometers are set.

   This helps in returning the adjustments to their original positions if it becomes necessary to restart the procedure.
3. During any of the following CRT adjustments, the CRT module must face west.
4. Use the following chart to guide you with the CRT adjustment procedure.

   The following CRT adjustments are broken down into adjustment groups. The adjustment group sequence must be followed in order because of interaction and dependency. The adjustment group sequence is shown in the adjustment flow diagram below. There will be cases where not all of the adjustments groups will be used. For example, if the Geometry Adjustment Group corrects the problem, this will be the only group used.

Color CRT Module Adjustment Flow Diagram

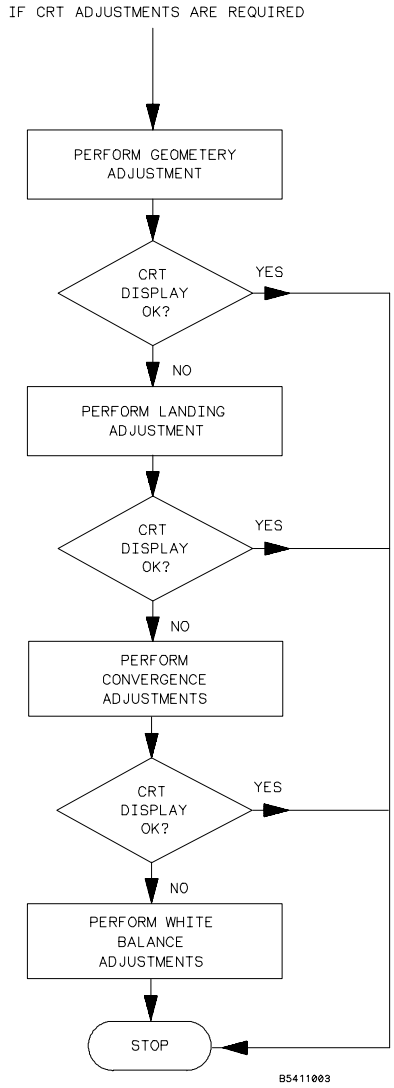

To access the test patterns

Some procedures on the following pages ask you to access test patterns. This procedure tells you how to access them and how to exit the test.

1. In the System Configuration menu, touch Configuration, then select Test in the pop-up menu.
2. Touch the field near the center of the screen to load the Test System.
3. In the Test System Configuration menu, touch Test System, then select Mainframe Test in the pop-up menu.

   The screen displays the Mainframe Test menu.
4. Touch the Color Display Test field to display the first test pattern, which is the white, cross-hatch pattern.

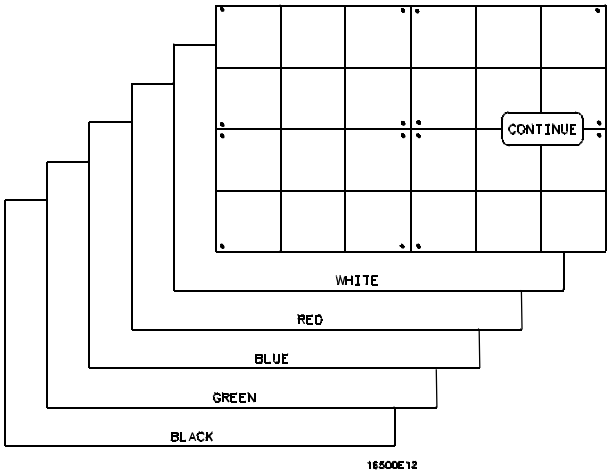

5. Touch Continue to see the next test pattern.

   With every touch of the Continue field, the next test pattern will be displayed. When Continue is selected from the black raster pattern, the Mainframe Test menu will be displayed. Notice that the status of the Display field changes to Tested.
6. To exit the test system, touch the Mainframe Test field, then touch the Test System. Touch Configuration, select test, then touch the field near the center of the screen to exit the test system.

To adjust geometry

1 Display the white cross-hatch test pattern on the CRT.

From the Color Display Test menu, select the white, cross-hatch pattern.

2 Preset the front panel brightness control, the top of the two controls to the left of the display, maximum clockwise.

3 Preset the front panel contrast control, the bottom of the two controls to the left of the display, to the mechanical center.

4 Preset H.SUB SHIFT (RV006) and V.SUB SHIFT (RV008), located on the bottom PC board, to the mechanical centers.

All of the following adjustment potentiometers are located on the PC board on the left side of the display.

5 Adjust the display size. Measure with a flexible ruler.

- Adjust H.SIZE (RV504) for a 161 mm (6.34 in.) width.
- Adjust V.HEIGHT (RV50) for a 120.5 mm (4.74 in.) height.

6 Center the pattern.

- Adjust V.CENT (RV510) for vertical centering.
- Adjust H.CENT (RV503) for horizontal centering.

7 Adjust PIN AMP (RV506) to eliminate pincushion distortion in the vertical lines of the cross-hatch pattern as shown in the next figure.

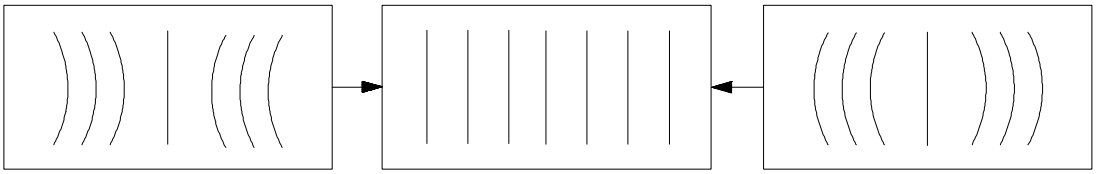

8 Remove the left, bottom rail of the mainframe.

The left, bottom rail must be removed in order to access the next adjustment.

9 Adjust PIN PHASE (RV505) to eliminate pin phase distortion in the vertical lines of the cross-hatch pattern as shown in the next figure.

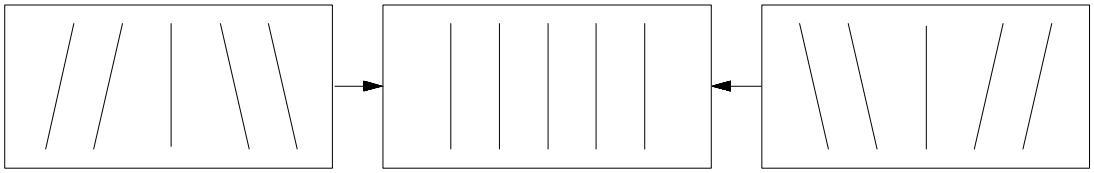

10 Reinstall the bottom rail.

11 Adjust TOP PIN (RV511) so that the top horizontal line is parallel with the center horizontal line.

12 Adjust BOTTOM PIN (RV512) so that the bottom horizontal line is parallel with the center horizontal line.

To adjust focus, landing, and convergence

Once you have started, you will have to do all three of the procedures in this group: the focus, the landing, and the convergence adjustments.

Initial Preparation

1 Loosen the deflection yoke clamp screw.

2 Remove the rear and side fans.

Refer to chapter 6, "Replacing Assemblies."

Focus Adjustment

Geometry adjustments must be performed before making the focus adjustment.

1 Display the white, cross-hatch test pattern on the display.

From the Color Display Test menu, select the white, cross-hatch pattern.

2 Adjust FOCUS (RV701), located on the rear PC board, for best overall focus.

Landing Adjustment

1 Turn the front panel BRIGHTNESS control fully clockwise.

2 Degauss the CRT by momentarily pressing the DEGAUSS switch located on the instrument rear panel.

In some cases, the user's environment or shipping environment may have caused high levels of magnetization in the CRT. In this case, to completely degauss the CRT you may need to use a conventional television-type degaussing coil.

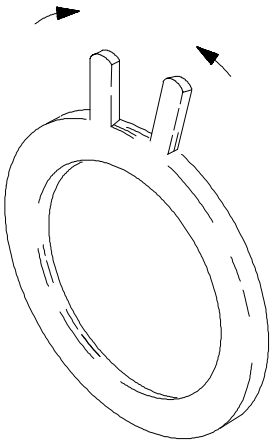

54720M06

3 Set the purity magnet tabs to the mechanical center. Refer to the next figure.

4 Display a green raster test pattern on the display.

From the Color Display Test menu, select the green raster.

In the next steps, while moving the deflection yoke forward and rearward, rotate the yoke as necessary to keep the edges of the raster parallel to the sides of the display.

6 Move the deflection yoke rearward until the left edge of the raster turns red and the right side of the raster turns blue.

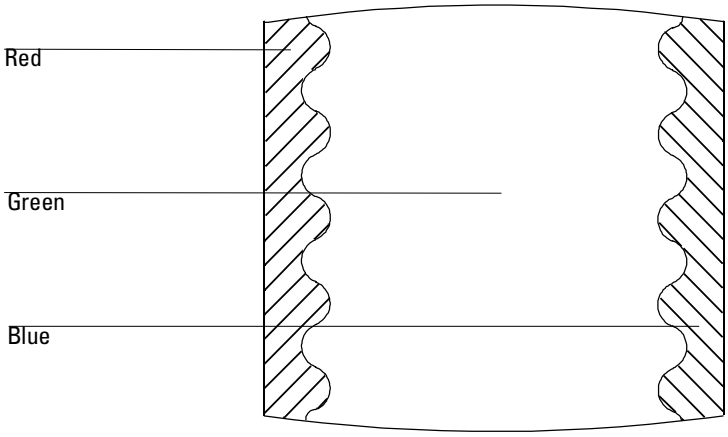

54720M07

7 Adjust the purity magnets until green is in the center of the raster with red and blue bands evenly distributed on the sides.

8 Move the deflection yoke forward until the entire raster is green.

Landing adjustment is easier if the yoke is moved all the way forward and then moved back until the raster is completely green.

9 Using the Color Purity key, replace the green raster with red and then blue raster, each time checking for proper landing adjustment (color purity of each).

10 If the landing is not correct in step 9, repeat steps 6 through 9 for the best compromise.

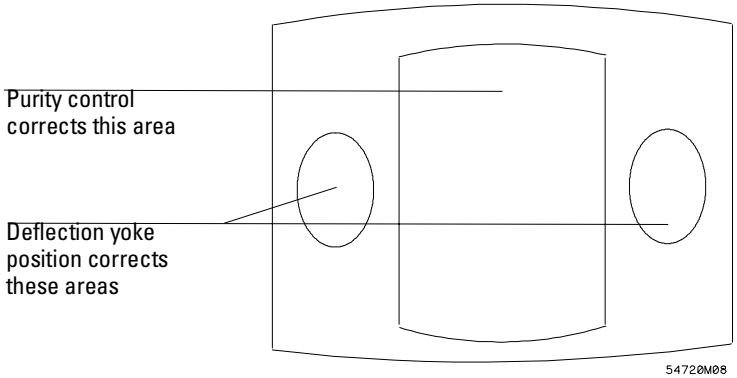

11 If the landing is not correct in step 10, readjust purity magnets for best landing of each color.

12 When the landing adjustment is complete, tighten the deflection yoke clamp screw just enough to keep the yoke from moving. DO NOT over tighten or you might damage the CRT.

Static Convergence

1 Temporarily disconnect the power from the instrument.

2 Remove the PC board shield cover from the rear of the Color CRT Module by prying evenly on all four sides.

3 Reapply power.

4 Display the white, cross-hatch test pattern on the CRT.

From the Color Display Test menu, select the white, cross-hatch pattern.

5 Preset front panel brightness control, the top of the two controls to the left of the display, maximum clockwise.

6 Preset front panel contrast control, the bottom of the two controls to the left of the display, to the mechanical center.

7 Check the four dots which are located around the center intersection of the cross-hatch pattern for coincidence of the blue, red, and green dots. If the dots are not coincident, adjust H.STAT (RV703) located on the rear PC board to obtain horizontal coincidence and V.STAT (RV803) located on the bottom PC board to obtain vertical coincidence.

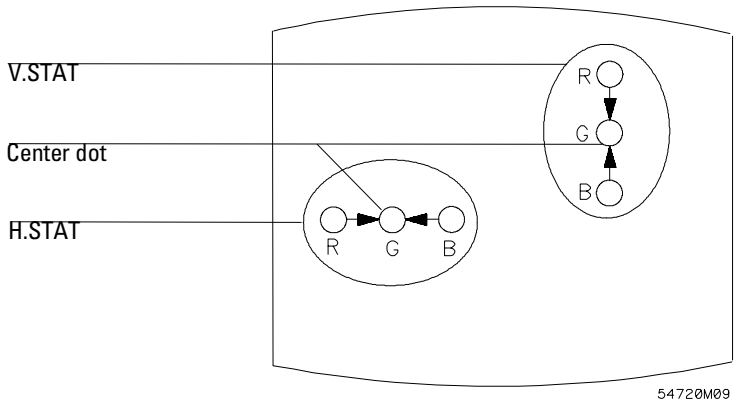

Due to interaction, the BEAM LANDING will need to be readjusted if either the H.STAT or V.STAT adjustments are made. Once the BEAM LANDING is re-adjusted, repeat step 7 above if necessary to obtain the center screen coincidence of the dots.

Dynamic Convergence

1 Display the white, cross-hatch test pattern on the CRT.

From the Color Display Test menu, select the white, cross-hatch test pattern.

2 Adjust Y BOW (RV805) located on the bottom PC board to eliminate red, green, and blue bowing at the top and bottom of the center vertical line.

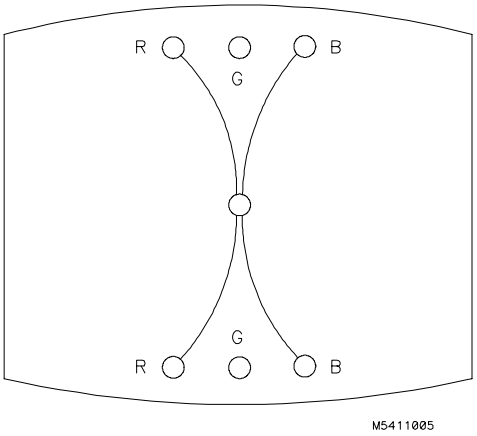

3 Adjust Y CROSS (RV804) located on the bottom PC board to eliminate red, green, and blue orthogonal misalignment at the top and bottom of the center vertical line.

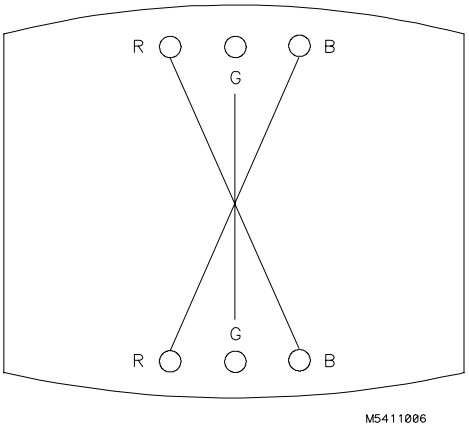

4 Adjust V TOP (RV801) and V BOTTOM (RV802) to obtain coincidence of the red, blue, and green at the intersection of the top and bottom horizontal lines with the center vertical line. The VTOP and VBOTTOM adjustments are located on the bottom PC board. Use the next two figures for V TOP and V BOTTOM respectively.

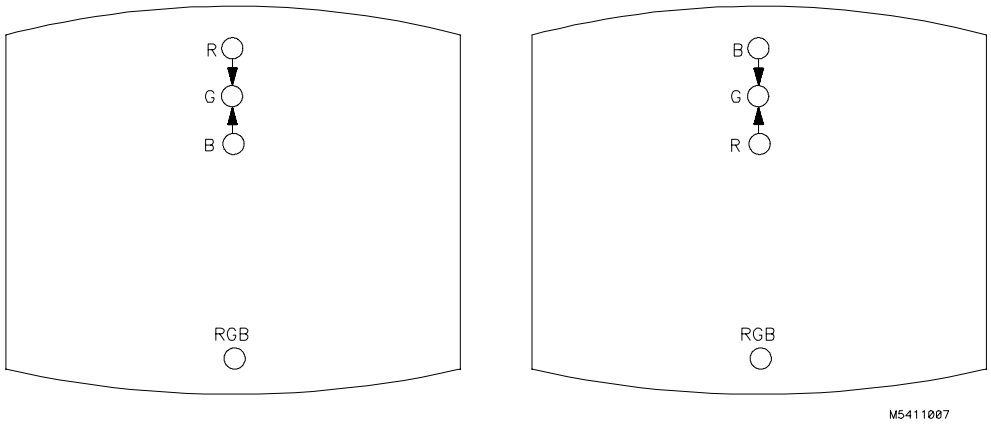

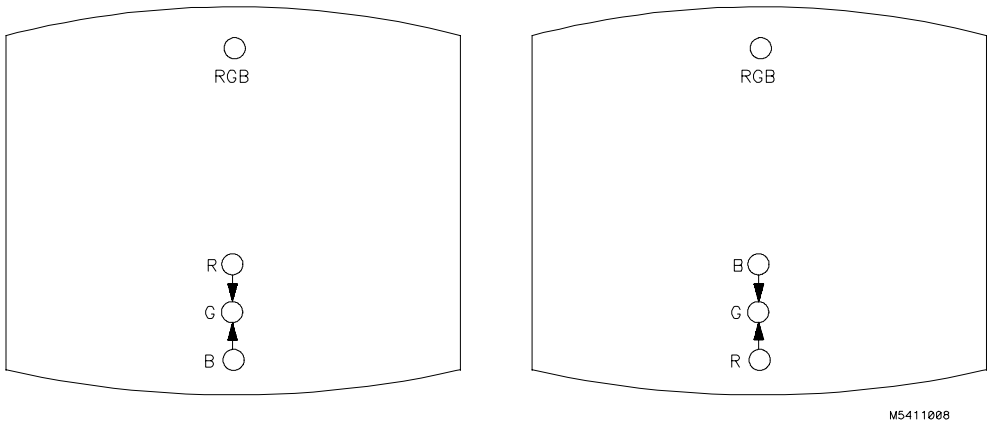

5 Adjust H.AMP (RV807) located on the bottom PC board for equal amounts of misconvergence at the right and left sides of the screen.

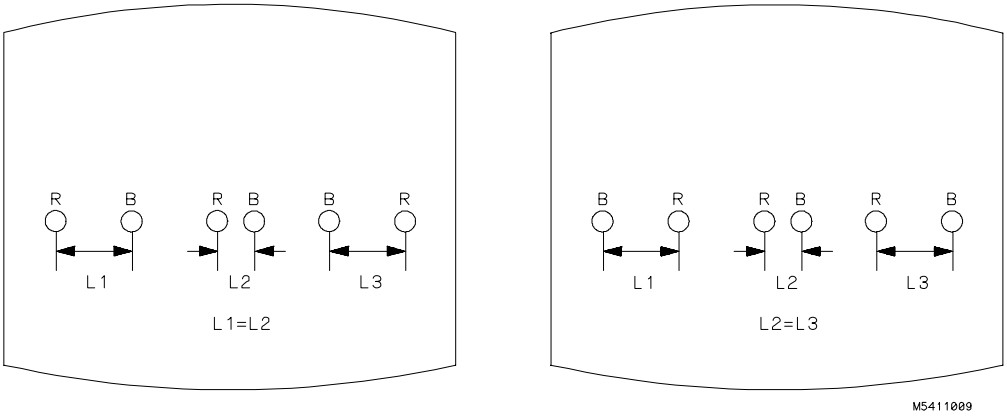

6 Adjust H.TILT (RV806) located on the bottom PC board for coincidence of red, green, and blue at the right and left sides of the screen.

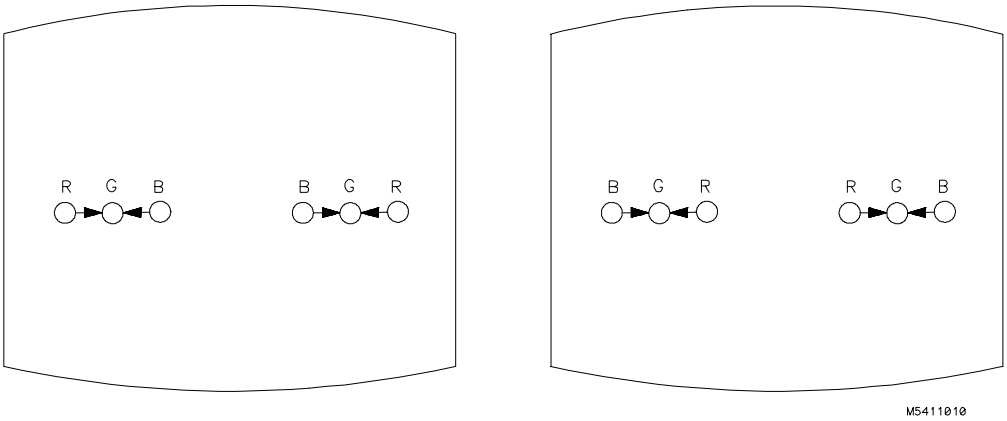

7 If you are finished with the CRT adjustments, replace the fans.

If you need to adjust the white balance, which is the next procedure, you will replace the fans after completing that procedure.

To adjust white balance

1. Provide a blank display on the CRT.

   From the Color Display Test menu, select a blank (colorless) raster.
2. Preset the front panel brightness and contrast controls to their mechanical centers.
3. On the bottom PC board, set the following adjustments to their mechanical centers.
   - SUB BRT (RV901)
   - SUB CONT (RV902)
4. On the bottom PC board, set the following adjustments to their mechanical centers.
   - G. DRIVE (RV921)
   - B. DRIVE (RV931)
   - R. DRIVE (RV911)
5. On the rear PC board, set the following adjustments fully counterclockwise.
   - G. BKG (RV721)
   - B. BKG (RV731)
   - R. BKG (RV711)
6. Adjust the SCREEN (RV702) located on the rear PC board until either the red, green, or blue raster just starts to become visible. Note which color becomes visible first and do not adjust the background control (BKG) for that color in the next step.
7. Adjust the other two background controls for the best white balance.
8. From the Color Display Test menu, select the white raster test pattern.
9. Set the front panel brightness control to maximum.
10. On the bottom PC board, adjust the DRIVE controls (RV921, RV931 and RV911) for the best white balance.

    For a white balance reference, use an average piece of white photocopy paper and compare the white on the CRT to the paper.
11. Repeat steps 1-3 followed by 6-10 until satisfied with the white balance.

    Essentially, from this point the procedure is as follows:

    a With a blank screen, the front panel brightness set to center, and SCREEN (RV702) set for minimum background, adjust the BKG controls (G.-RV721, B.-RV731, and R.-RV711) for the best white balance.

    b With a white raster and the front panel brightness set to maximum, adjust the DRIVE controls (G.-RV921, B.-RV931, and R.-RV911) for best white balance.

    c Repeat until satisfied with the white balance.
12. Replace the side and rear fans.

    Refer to chapter 6, "Replacing Assemblies."

5

To use the flowcharts 5–2
To check the power-up self-tests 5–18
To run the self-tests 5–19
To check the video signals 5–22
To check the power supply LEDs 5–23
To test the power supply voltages 5–24
To test the flexible disk drive voltages 5–25
To test the hard disk drive voltages 5–27
To test the expansion frame interface 5–29

Troubleshooting

Troubleshooting

This chapter helps you troubleshoot the logic analysis system to find defective assemblies. The troubleshooting consists of flowcharts, self-test instructions, and tests. This information is not intended for component-level repair.

If you suspect a problem, start at the top of the first flowchart. During the troubleshooting instructions, the flowcharts will direct you to perform other tests. The other tests are located in this chapter after the flowcharts.

The service strategy for this instrument is the replacement of defective assemblies. This instrument can be returned to Hewlett-Packard for all service work, including troubleshooting. Contact your nearest Hewlett-Packard Sales Office for more details.

CAUTION

Electrostatic discharge can damage electronic components. Use grounded wriststraps and mats when you perform any service to this instrument or to the cards in it.

To use the flowcharts

Flowcharts are the primary tool used to isolate defective assemblies. The flowcharts refer to other tests to help isolate the trouble. The circled letters on the charts indicate connections with the other flowcharts. Start your troubleshooting at the top of the first flowchart.

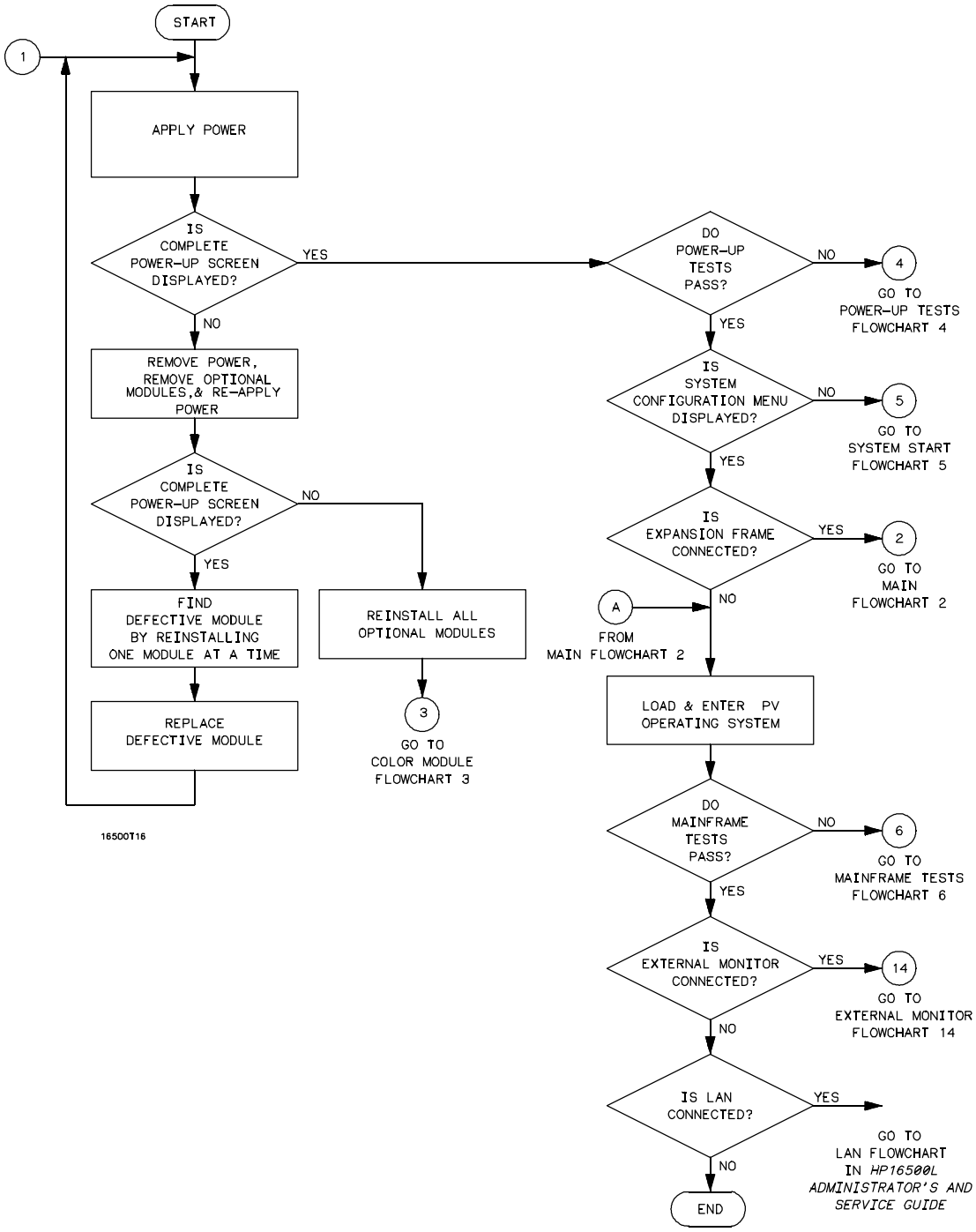

Main Troubleshooting Flowchart 1

Note: The HP 16500L is in the System Configuration menu if "Master Frame" is in a blue field and "Ethernet" is in the Communications field.

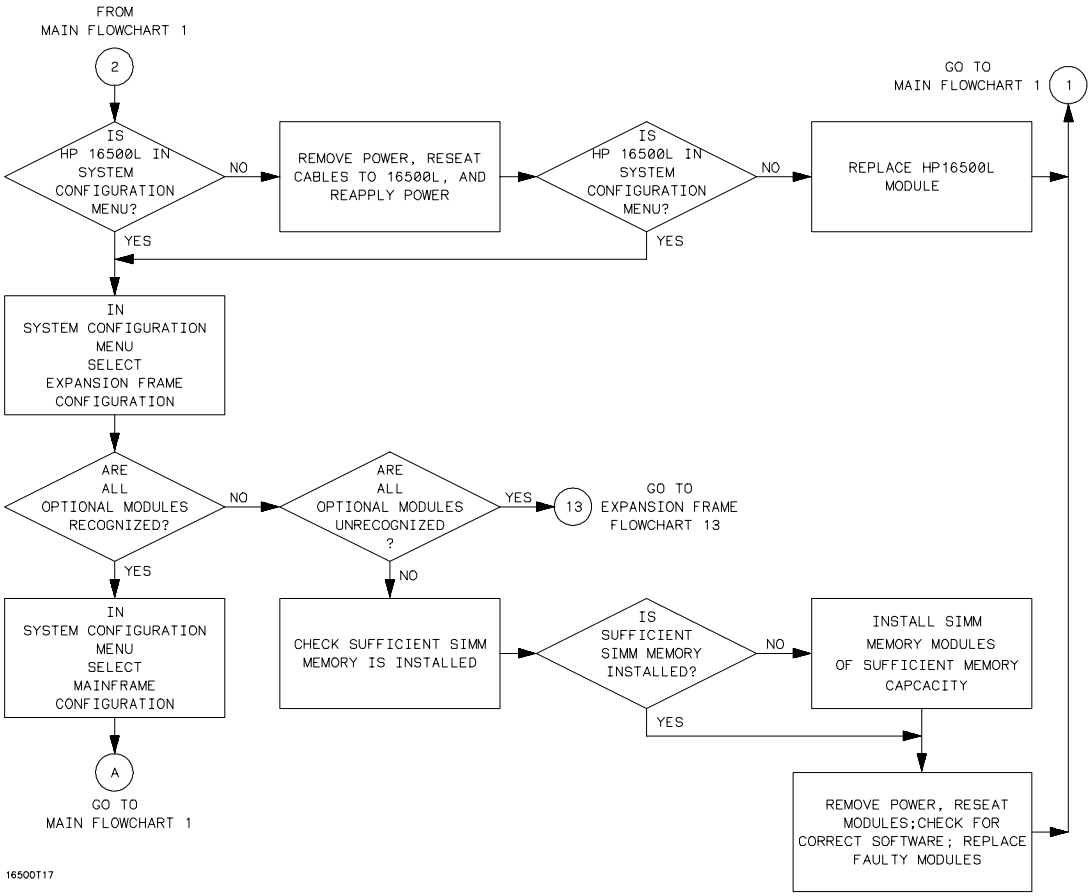

Main Troubleshooting Flowchart 2

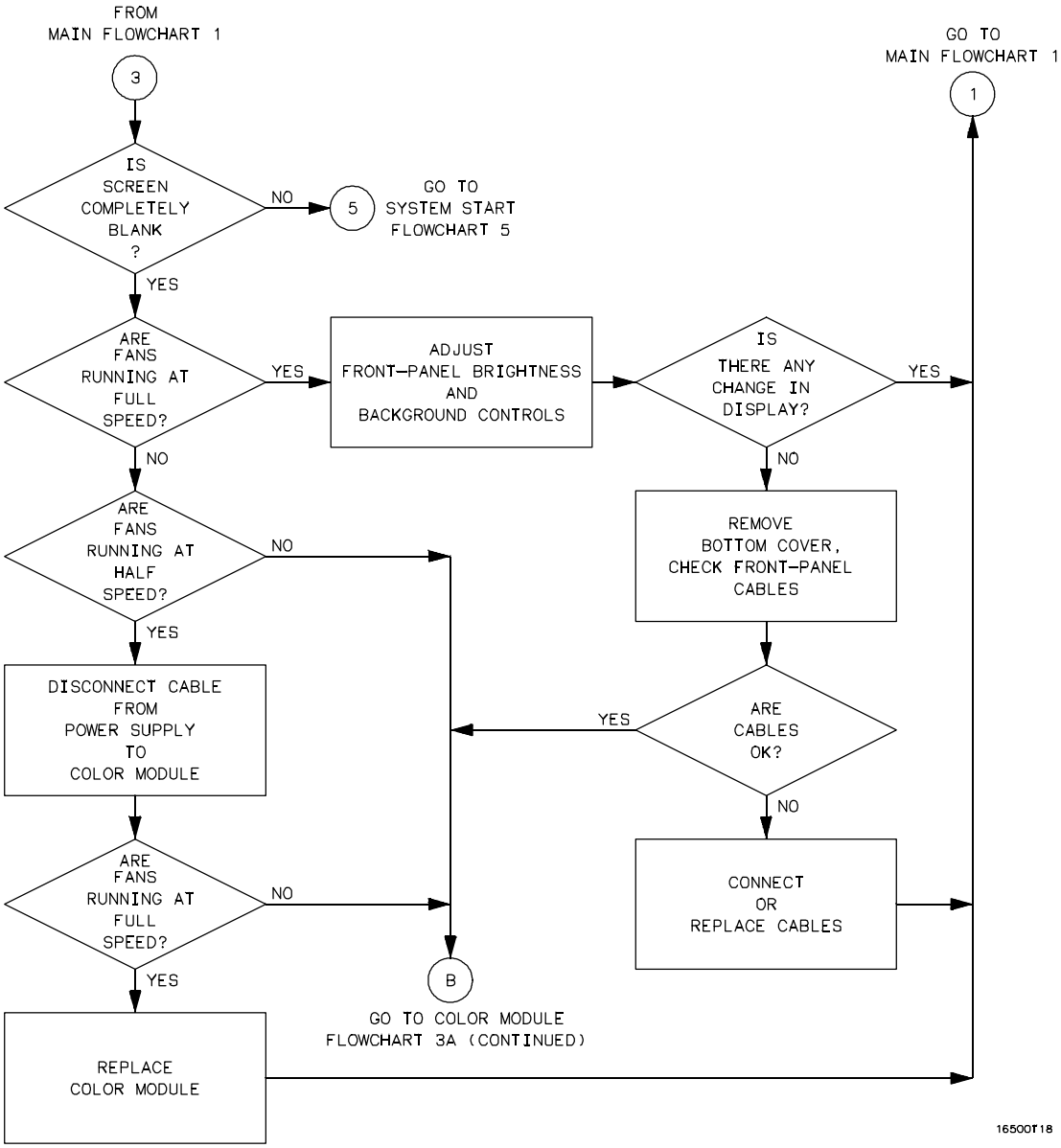

Color Module Troubleshooting Flowchart 3

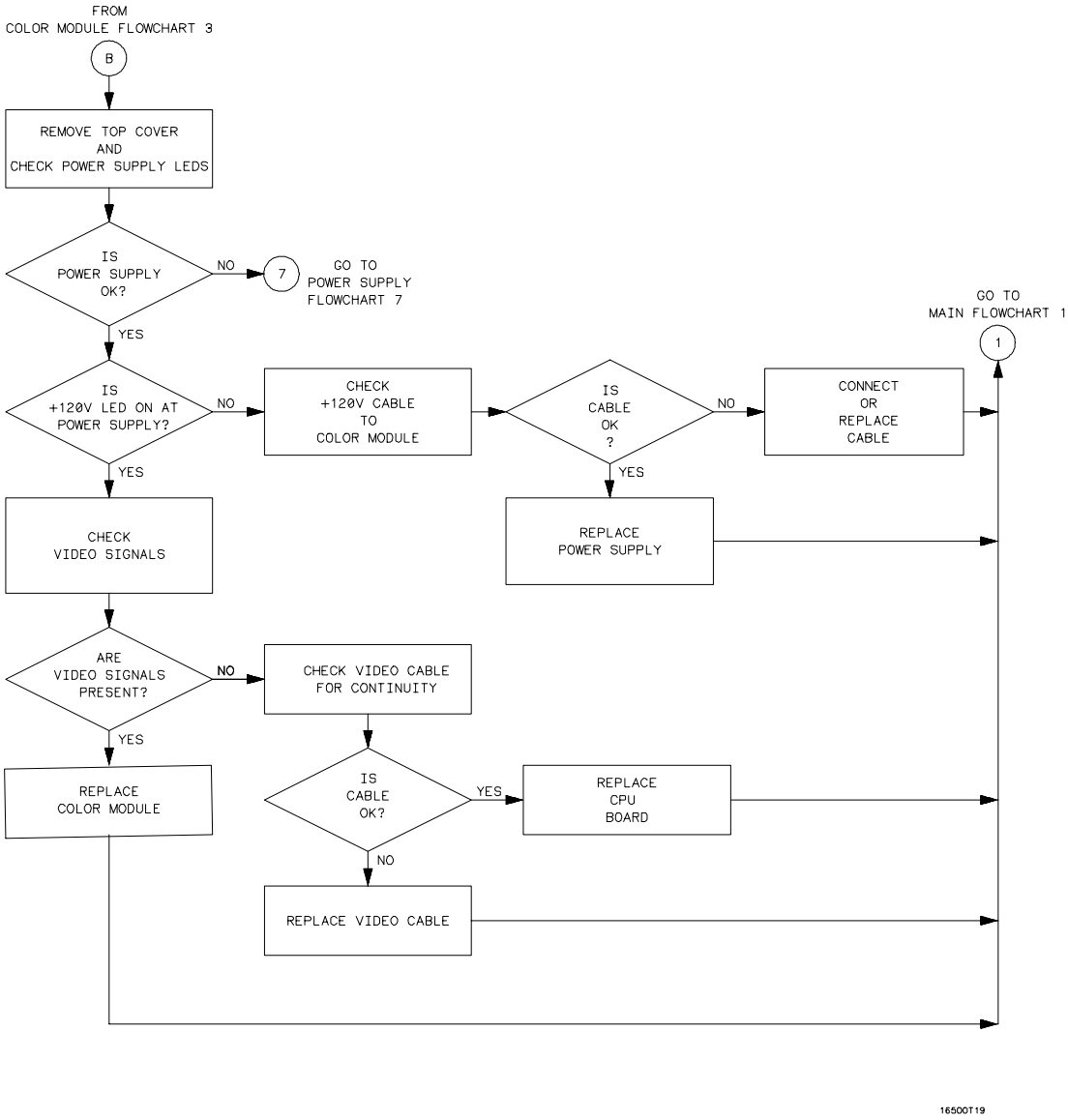

Color Module Troubleshooting Flowchart 3A (continued)

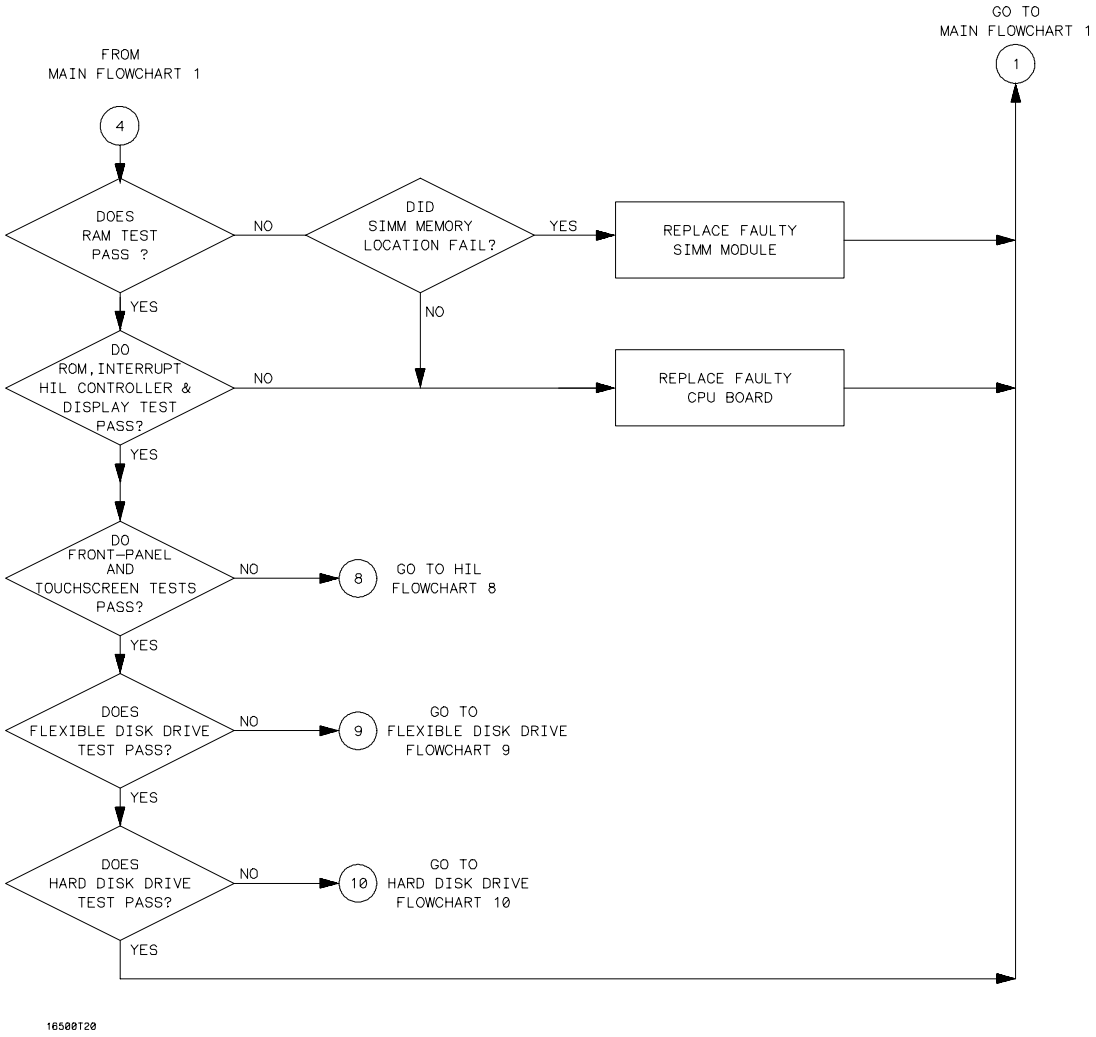

Power-Up Troubleshooting Flowchart 4

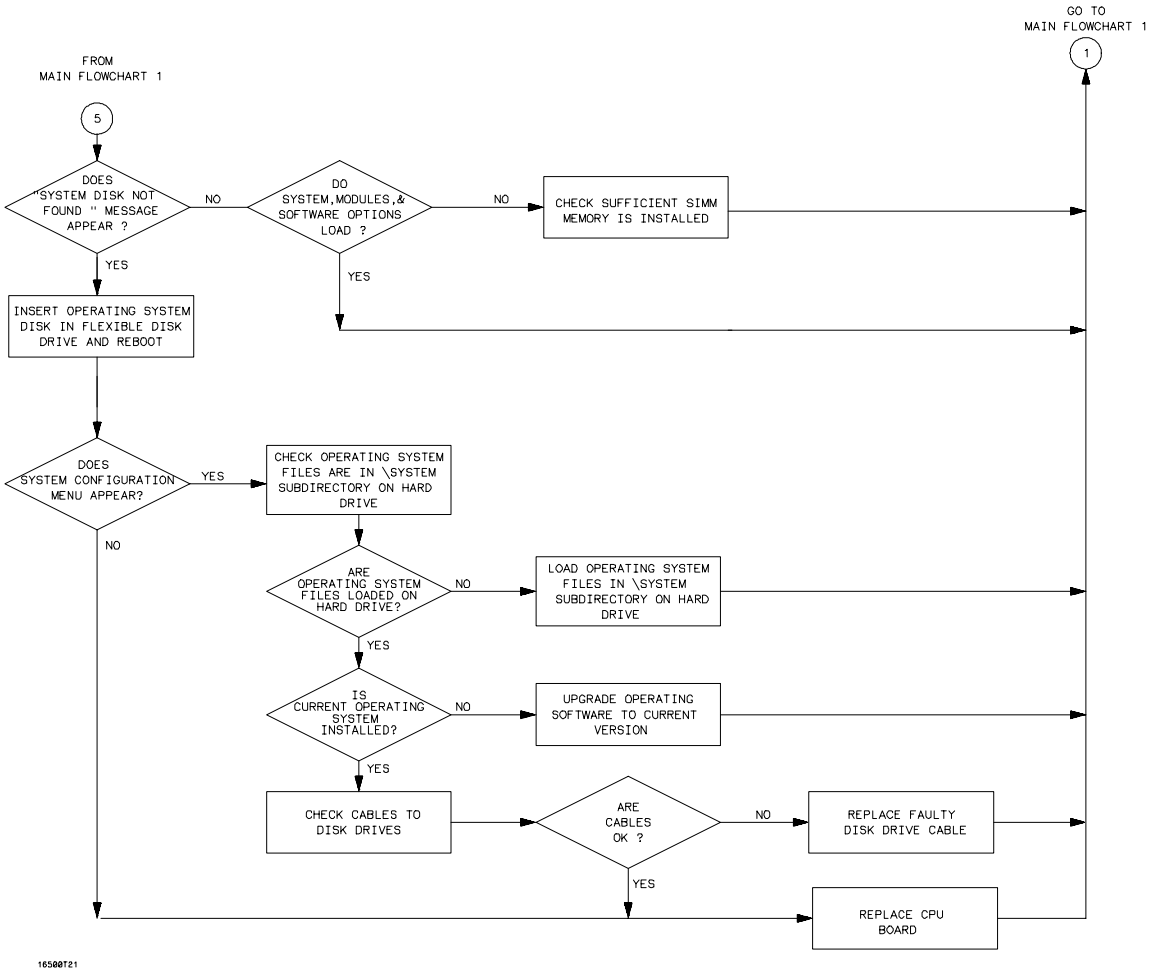

System Start Troubleshooting Flowchart 5

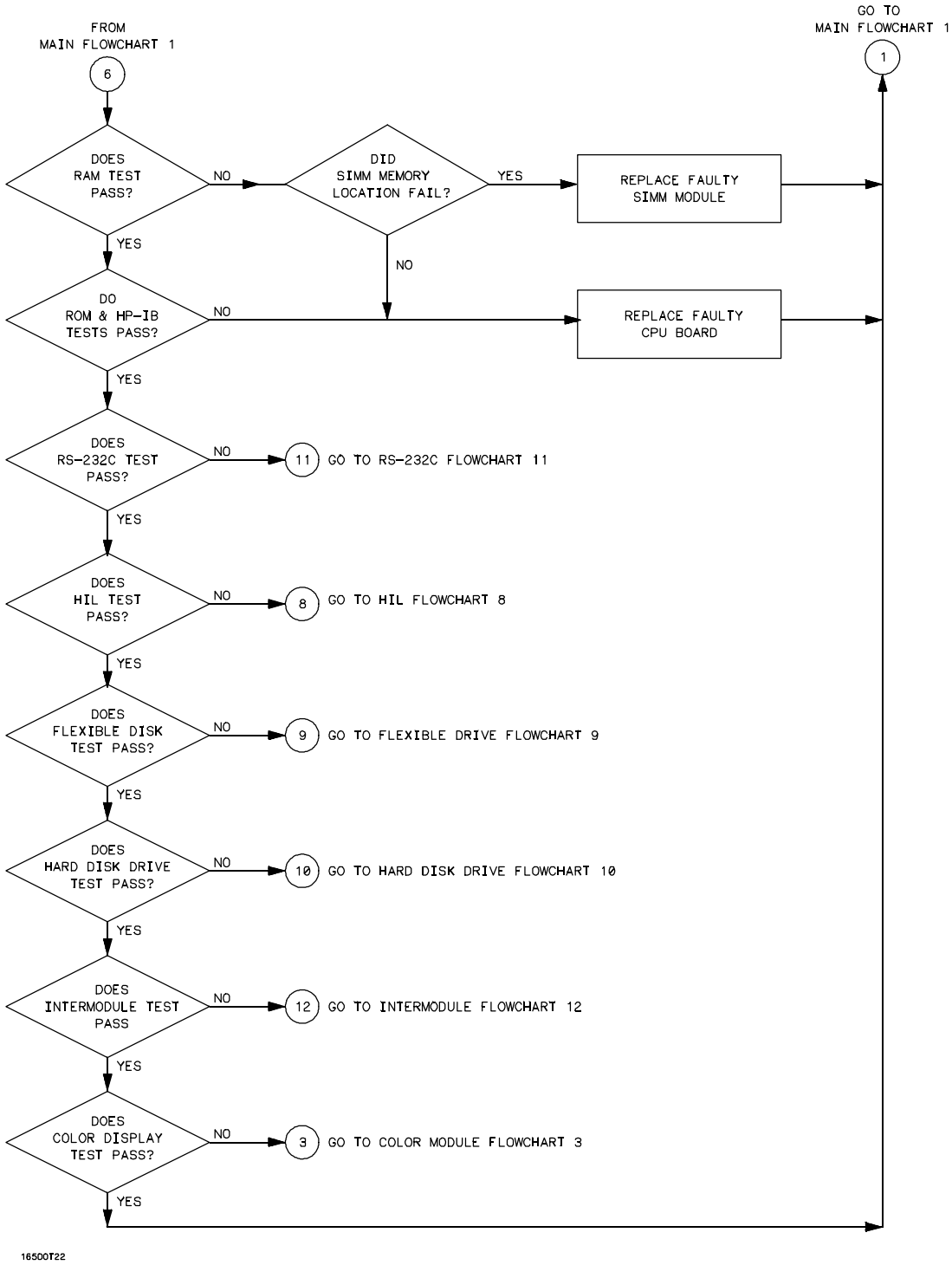

Mainframe Tests Troubleshooting Flowchart 6

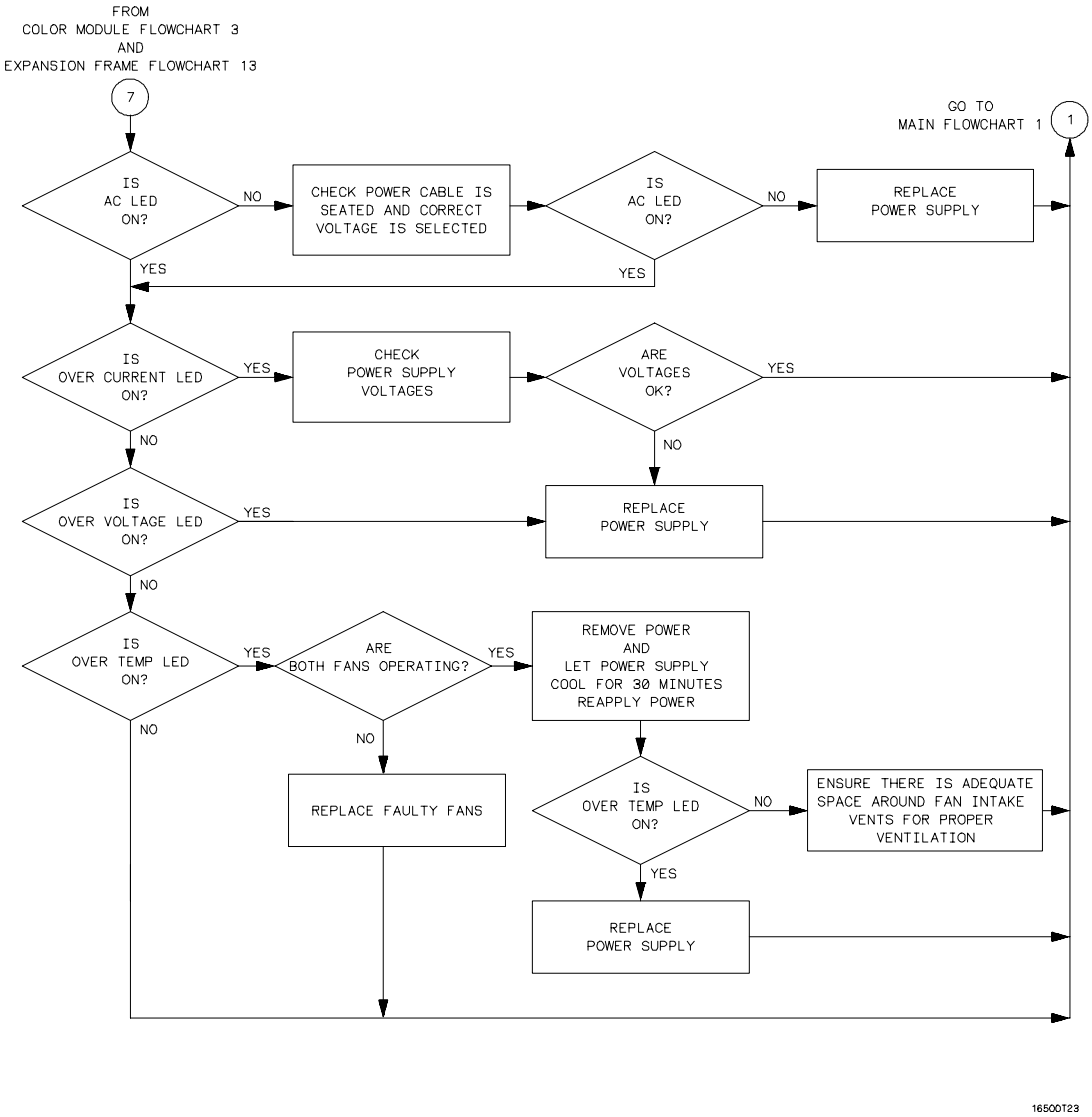

Power Supply Troubleshooting Flowchart 7

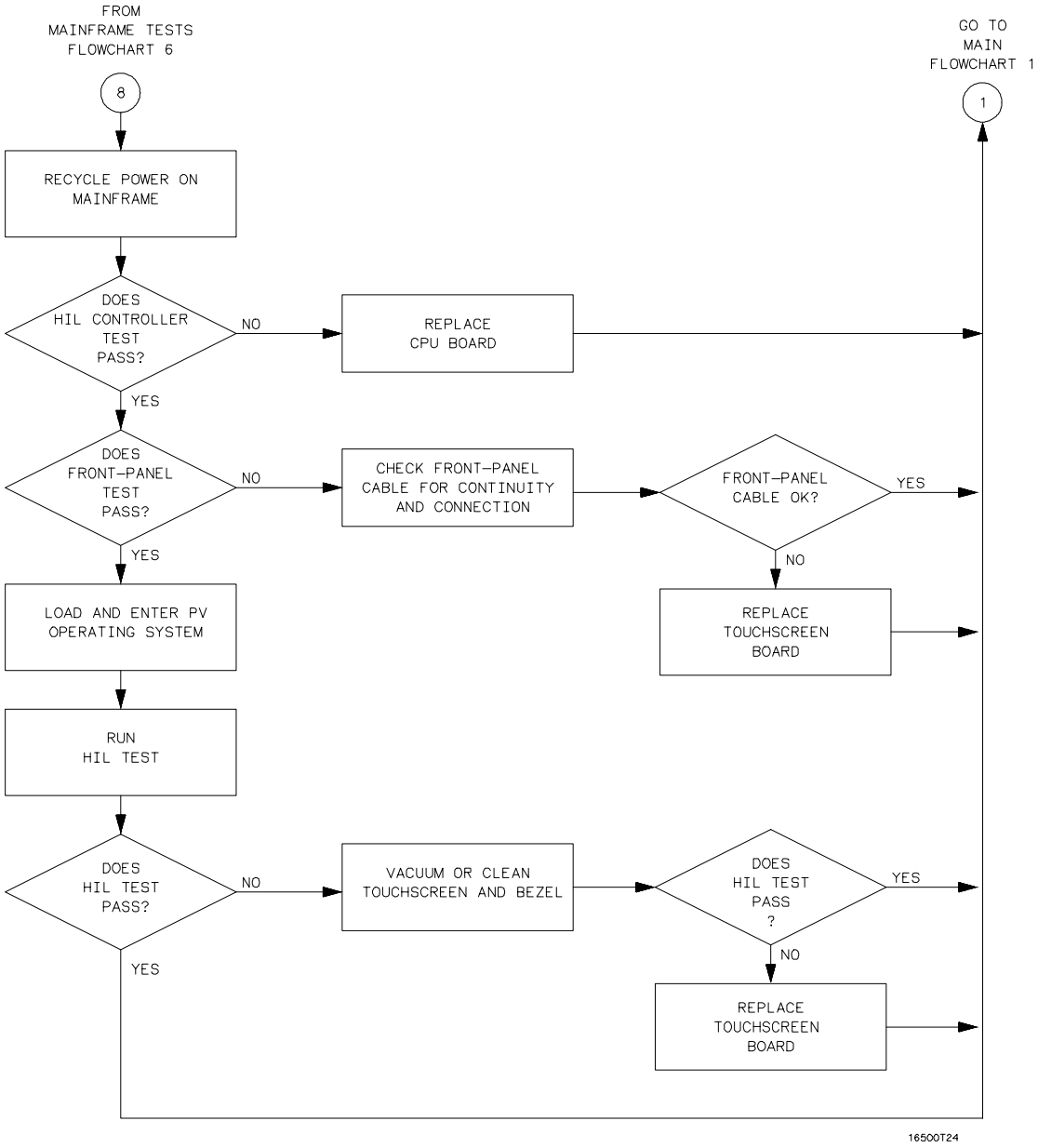

HIL Troubleshooting Flowchart 8

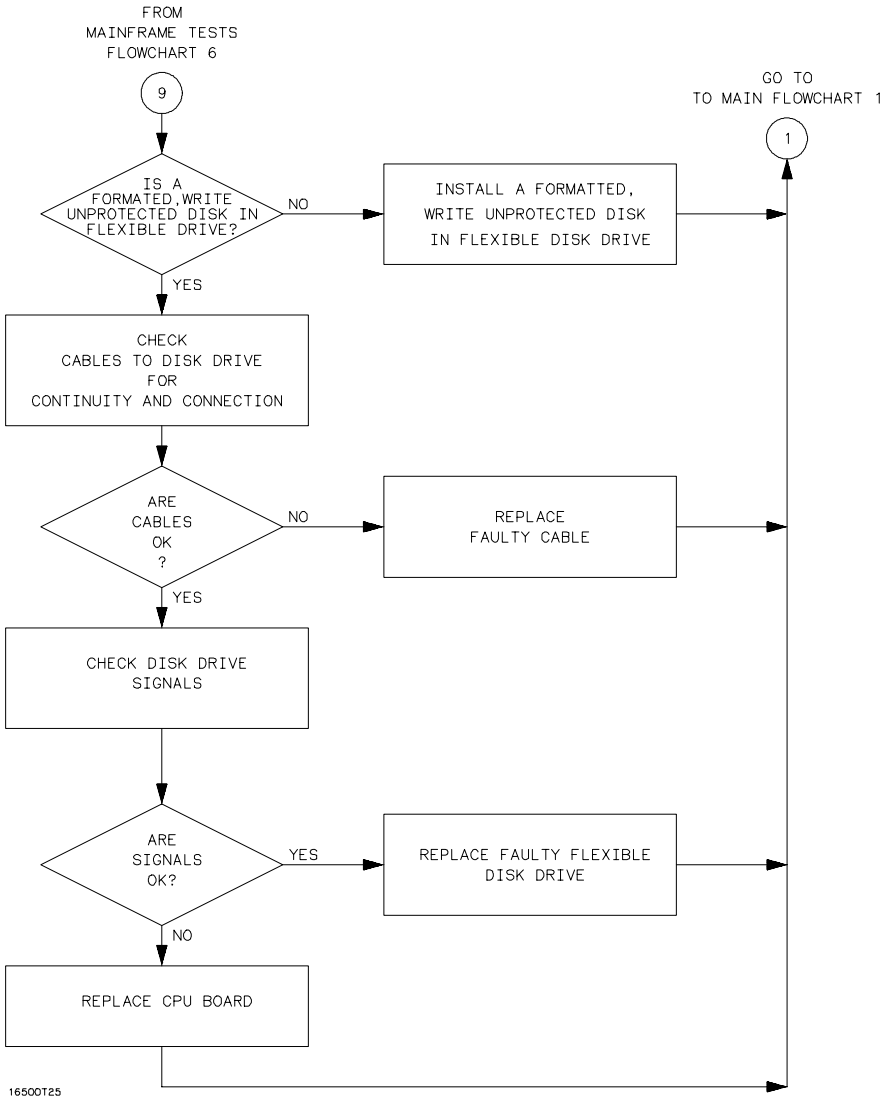

Flexible Disk Drive Troubleshooting Flowchart 9

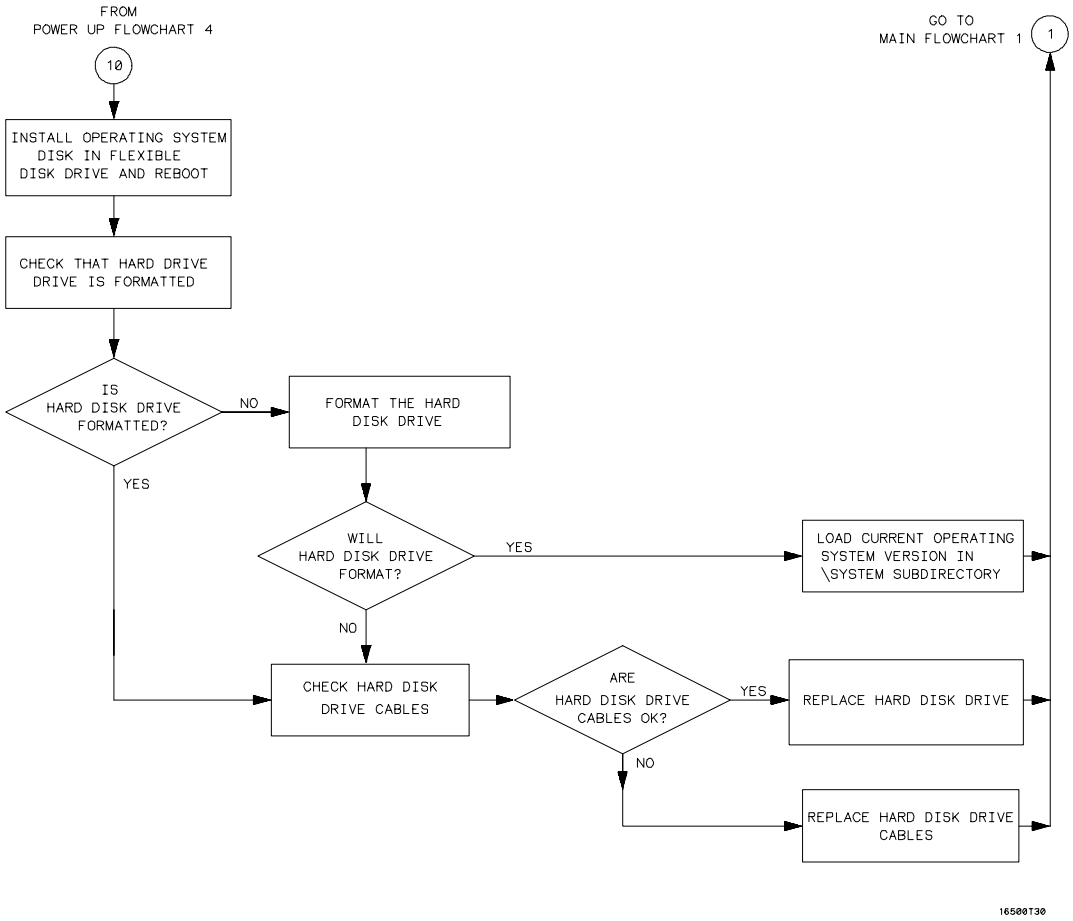

Hard Disk Drive Troubleshooting Flowchart 10

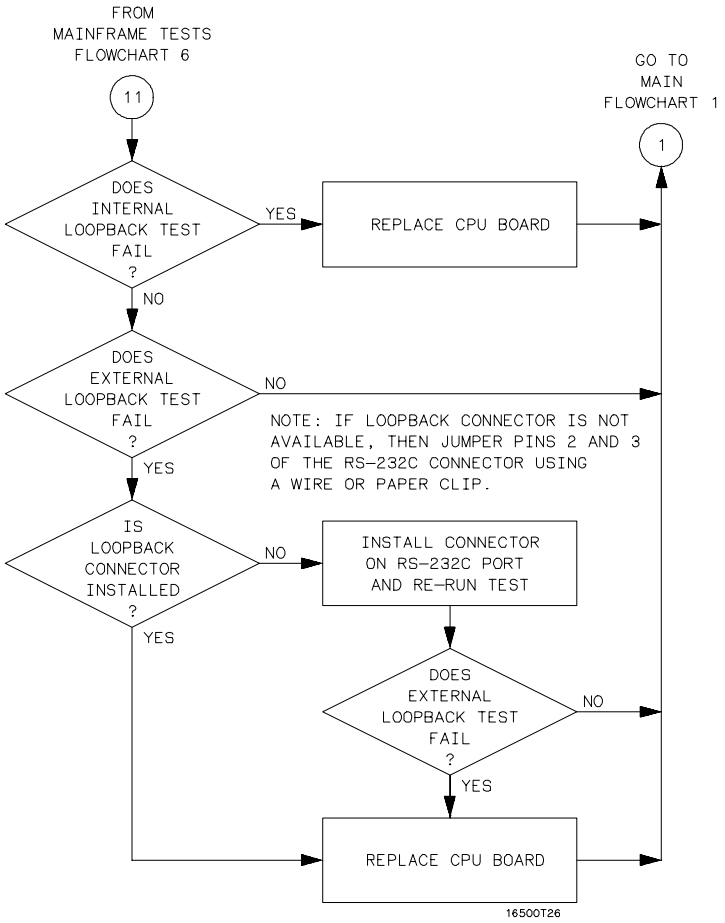

RS-232C Troubleshooting Flowchart 11

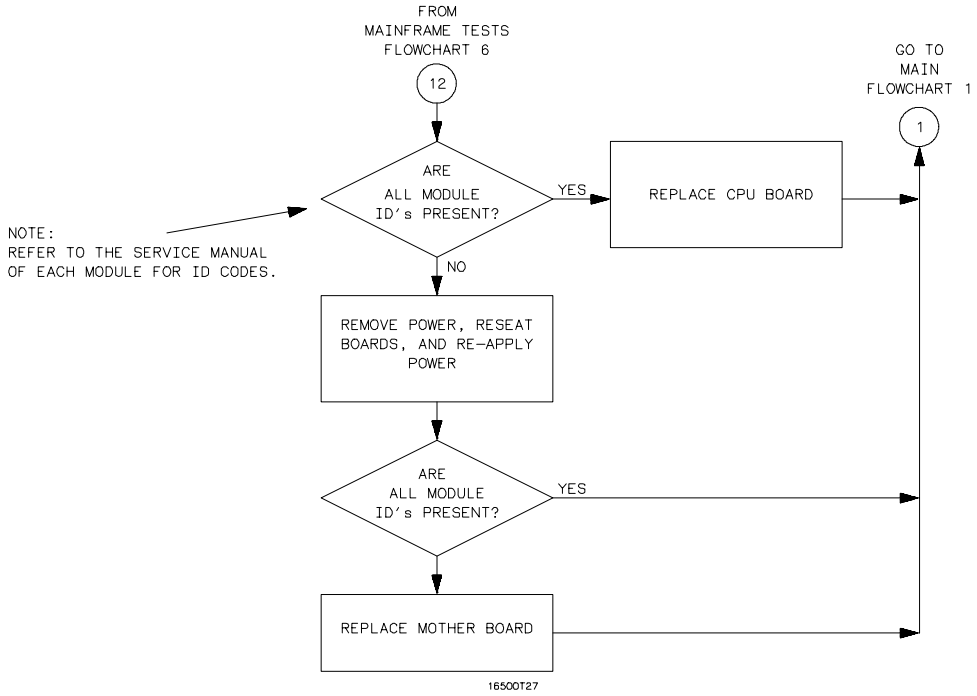

Intermodule Troubleshooting Flowchart 12

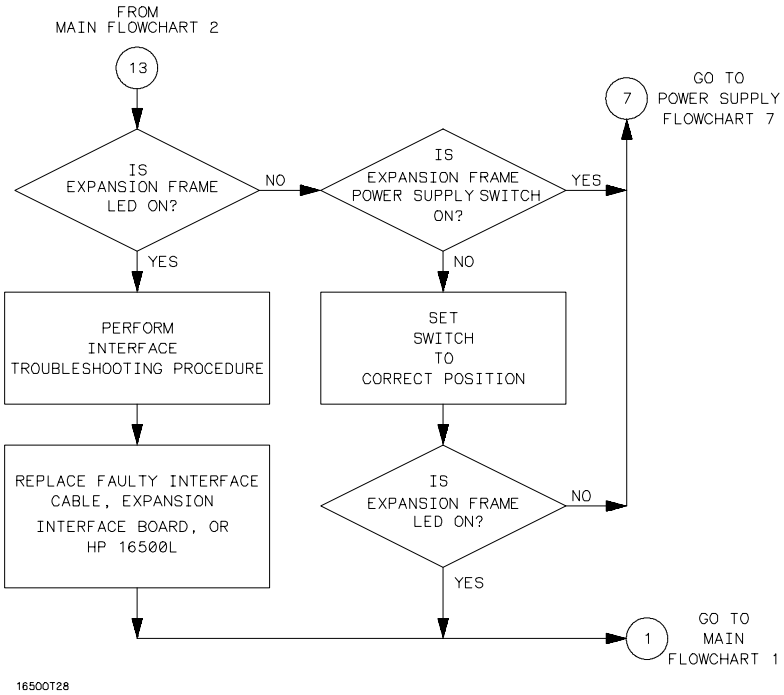

Expansion Frame Troubleshooting Flowchart 13

Note: Compare the specifications of the monitor against the specifications of the video signal as a way to determine compatibility (ability to synch). Video signal specifications are listed in "To connect an external monitor" in chapter 2.

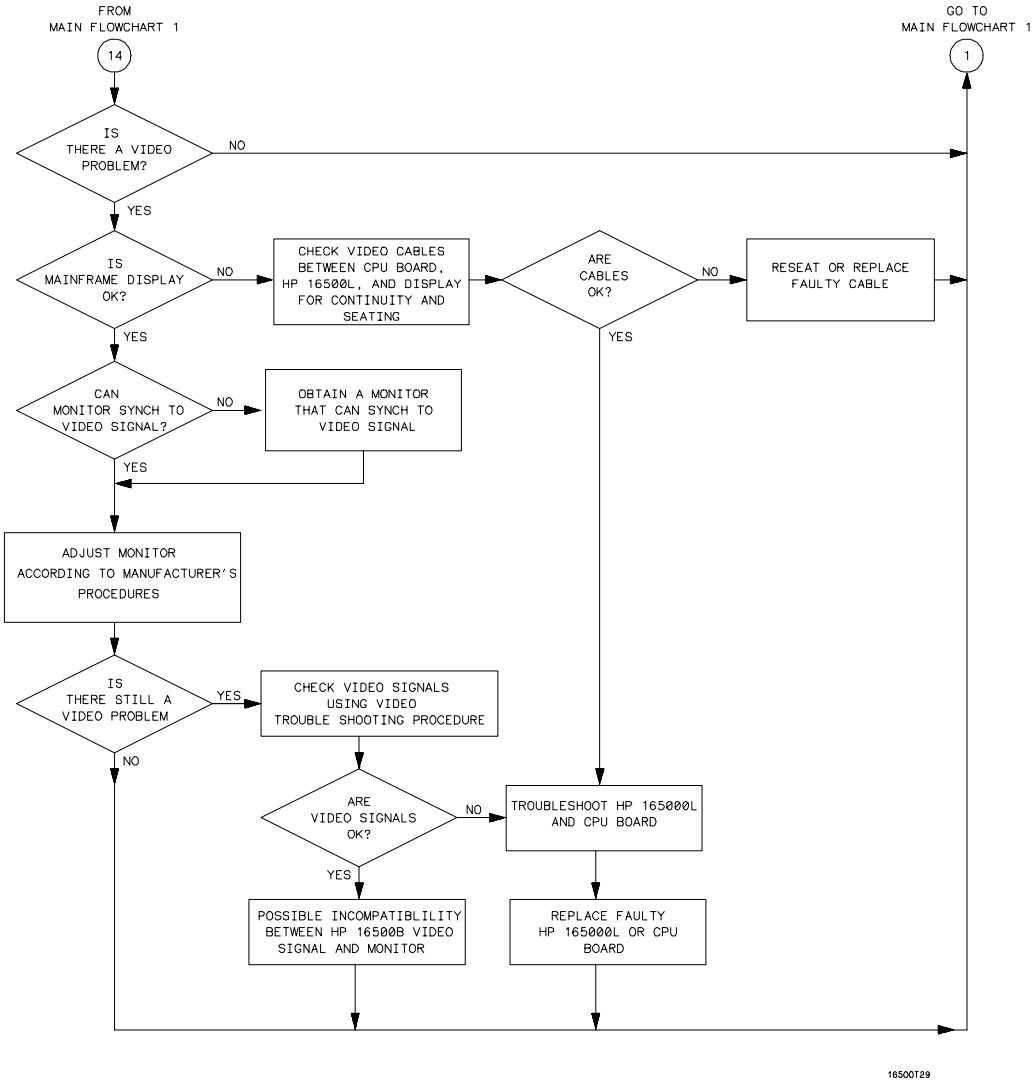

External Monitor Troubleshooting Flowchart 14

To check the power-up self-tests

The logic analysis system automatically performs power-up self-tests when you apply power to the instrument. The revision number of the operating system shows in the upper-right corner of the screen during these power-up tests. As each test completes, either "passed" or "failed" appears on the screen in front of the name of each test.

1. Disconnect all inputs, then insert a formatted disk into the flexible disk drive.
2. Let the instrument warm up for a few minutes, then cycle the power by turning off and turning on the power switch.

   If the instrument is not warmed up, the power-up test screen will complete before you can view the screen.
3. As the tests complete, check if they pass or fail, then return to the flowcharts.

   The Flexible Disk Test reports No Disk if a disk is not in the disk drive. Refer to the tables below for the screen listing after the tests are complete and for power-up error messages.

Power-Up Self-Test Screen Listing

Performing Power-Up Self-Tests	
passed	ROM Test
passed	RAM Test
passed	Interrupt Test
passed	Display Test
passed	HIL Controller Test
passed	Front-Panel Test
passed	Touchscreen Test
passed	Correlator Test
passed	Hard Disk Test
passed	Flexible Disk Test
Loading Module Files	

Error Messages at Power-Up

Message	Cause	Remedy
FATAL ERRORS ENCOUNTERED, BOOT HALTED	A power-up test failed.	Follow the troubleshooting flowcharts.
SYSTEM DISK NOT FOUND	The mainframe operating system cannot be found on the hard disk drive.	Install the operating system software onto the hard disk drive.
Touchscreen power-up test impaired	The touchscreen operation is impaired.	Follow the troubleshooting flowcharts. The touchscreen might still operate with a minimal loss of functionality.

See Also

"The Power-Up Routine" in chapter 8.

To run the self-tests

Self-tests identify the correct operation of major, functional subsystems of the instrument. You can run all self-tests without accessing the interior of the instrument. If a self-test fails, the troubleshooting flowcharts instruct you to change a part of the instrument.

1. If you just did the power-up self-tests, go to step 2.

   If you did not just do the power-up self-tests, disconnect all inputs, then turn on the power switch. Wait until the power-up tests are complete.
2. In the System Configuration menu, select Configuration, then select Test.

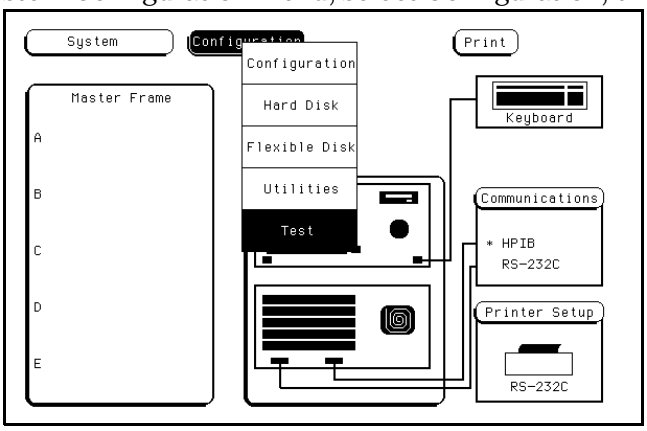

3. Select the box labeled Load Test System.
4. Select Test System, then select Mainframe Test from the pop-up menu.

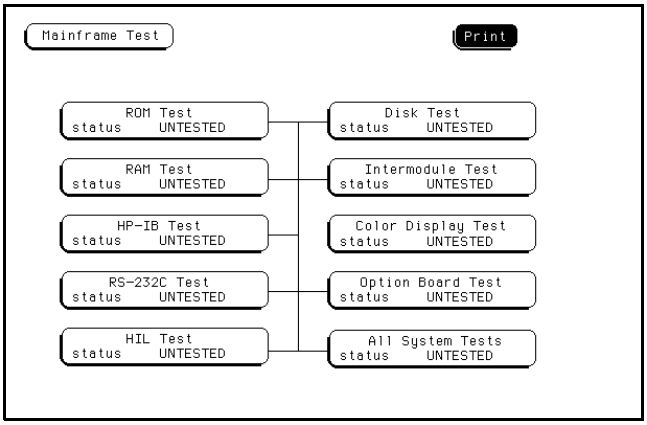

5 Select ROM Test. The ROM Test screen is displayed.

You can run all tests at one time by running All System Tests. To see more details about each test, you can run each test individually. This example shows how to run an individual test.

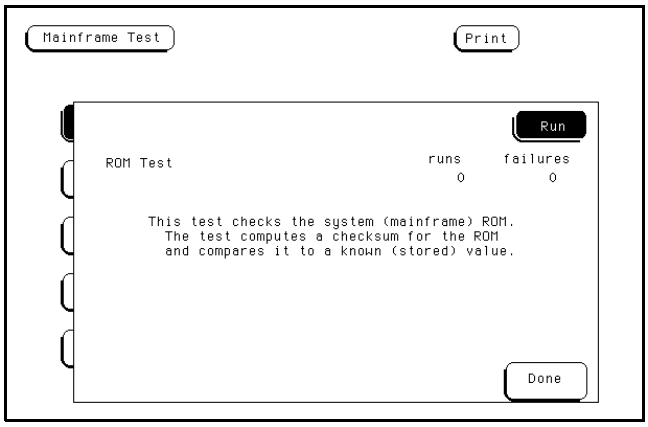

6 Select Run, then select Single.

To run a test continuously, select Repetitive. Select Stop to halt a repetitive test.

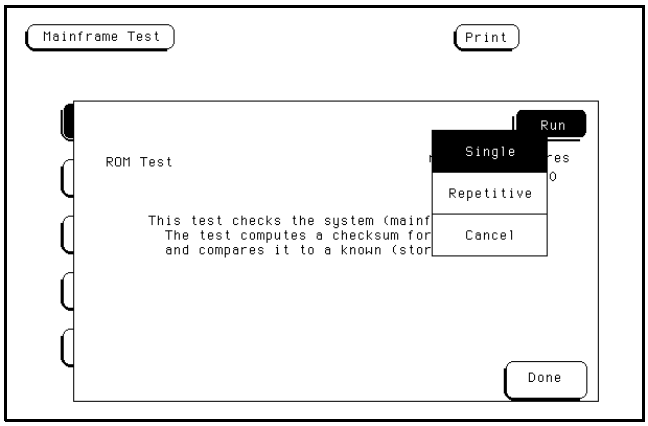

For a Single run, the test runs one time, and the screen shows the results.

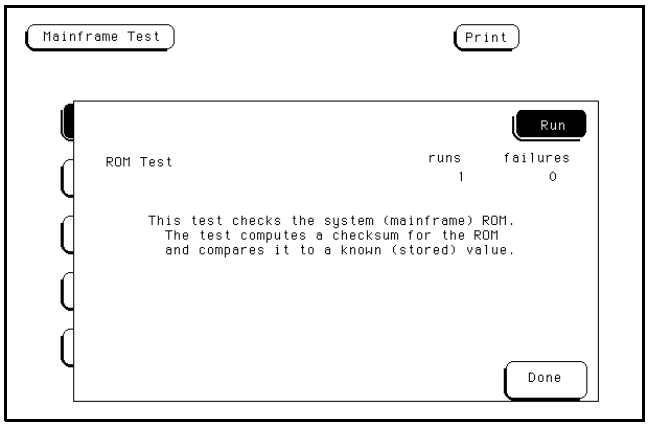

7 To exit the ROM Test, select Done. Note that the status changes to Passed or Failed.

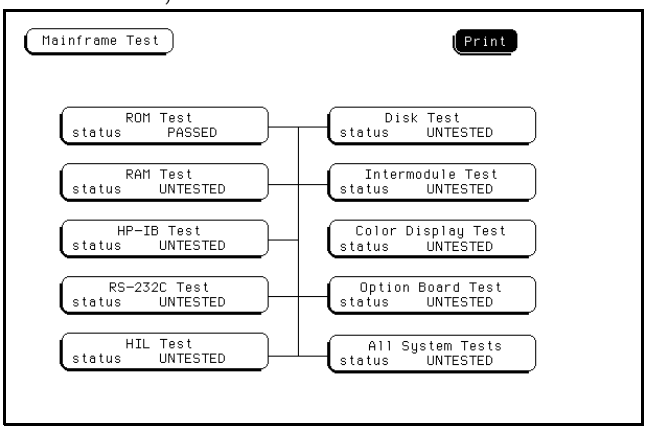

8 Install a formatted disk that is not write-protected into the flexible disk drive. Connect an RS-232C loopback connector onto the RS-232C port. Run the remaining All System Tests in the same manner.

The Color Display Test is not part of this troubleshooting. The Color Display Test is used in chapter 4, "Calibrating and Adjusting," to adjust the color display.

The Option Board Test is used later in this chapter to check signals to the HP 16501A Expansion Frame.

9 Exit the mainframe tests.

a Select Done from any test screen.

b Select Mainframe Test, then select Test System in the pop-up menu.

c Select Configuration, then select Exit Test in the pop-up menu.

d Select the box near the center of the screen to exit the test system.

10 If you are performing the self-tests as part of the troubleshooting flowchart, return to the flowchart.

To check the **video signals**

Refer to chapter 6, "Replacing Assemblies," for instructions on how to remove or replace covers and assemblies.

WARNING Hazard voltages exist on the power supply, the CRT, and the CRT driver board. This procedure is to be performed by service-trained personnel aware of the hazards involved, such as fire and electrical shock.

1. Turn off the instrument, then remove the bottom cover.
2. On the color assembly, disconnect the cable that connects the microprocessor board to the color display assembly.
3. Turn on the instrument, then wait for it to power up.
4. Probe the cable for the horizontal sync, vertical sync, and display data signals.

   The horizontal and vertical sync signals are TTL levels that resemble the figure.

   The display data signals have a baseline of approximately –1.7 V and vary in amplitude from the baseline voltage to approximately 125 mV, depending on the characteristics of the colors displayed.
5. Reconnect the cable, then return to the color display assembly flowchart.

Cable Pin Numbers

Pin Numbers	Signal
3	Vertical Sync
7	Horizontal Sync
21	Red Display Data
29	Green Display Data
37	Blue Display Data

Sync Signals

Vertical

Horizontal

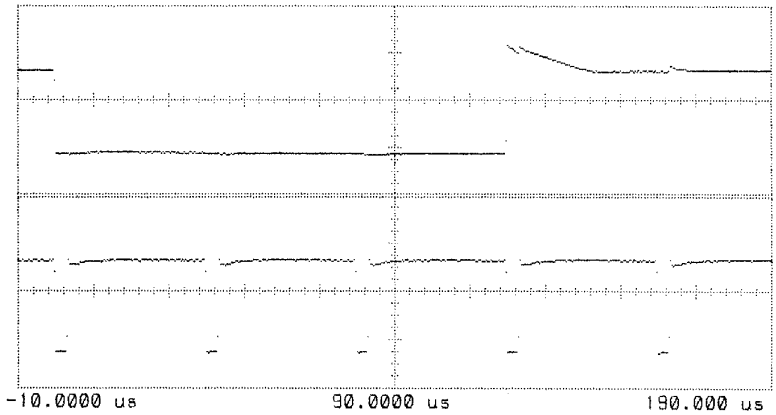

To check the power supply LEDs

Refer to chapter 6, "Replacing Assemblies," for instructions to remove or replace covers and assemblies.

WARNING Hazard voltages exist on the power supply, the CRT, and the CRT driver board. This procedure is to be performed by service-trained personnel aware of the hazards involved, such as fire and electrical shock.

1. Turn off the instrument, then remove the top cover.
2. Apply power to the instrument.
3. Check the power supply LEDs.
4. Note problems with the power supply, then return to the power supply flowchart.

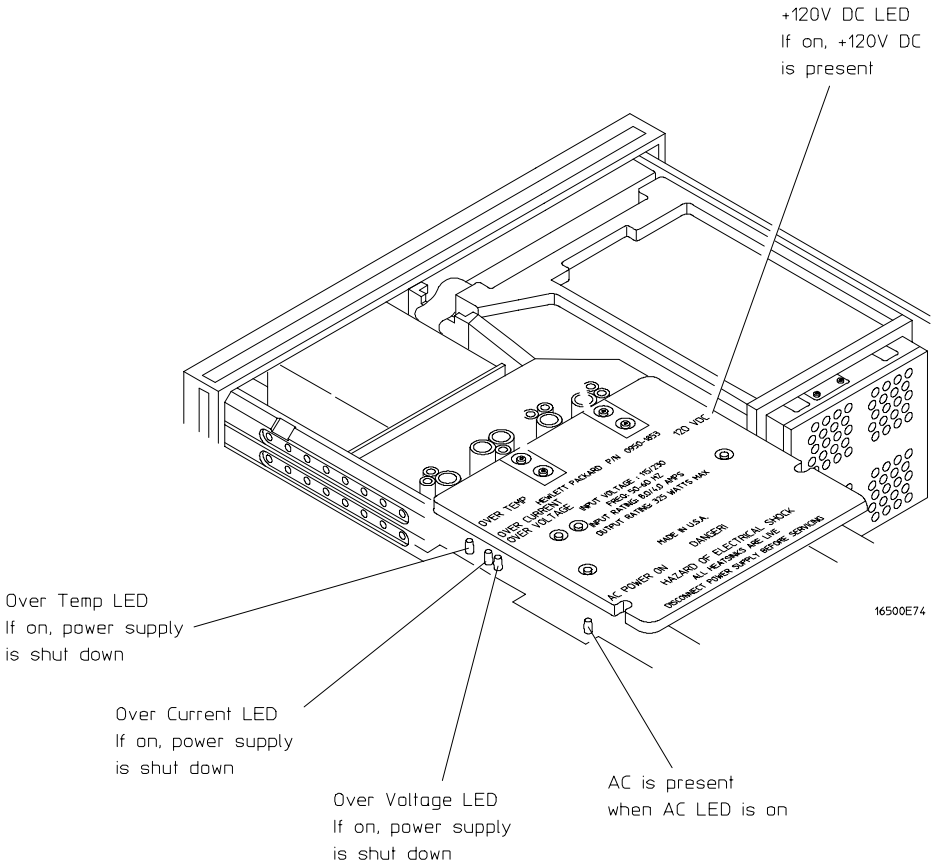

To check the power supply voltages

Refer to chapter 6, "Replacing Assemblies," for instructions to remove or replace covers and assemblies.

WARNING Hazard voltages exist on the power supply, the CRT, and the CRT driver board. This procedure is to be performed by service-trained personnel aware of the hazards involved, such as fire and electrical shock.

1. Turn off the instrument, disconnect the power cord, then remove the top cover.
2. Apply power to the instrument.
3. Using a DVM, measure the power supply voltages.
4. Note problems with the power supply, then return to the power supply flowchart.

Power Supply Voltages

Pin	Supply/Signal	Voltage	Pin	Supply/Signal	Voltage
1-5	5 volt	+5 V	21	Ground sense	0 V
6	+5 volt remote sense	+5 V	22	Power valid	+5 V
7-9	+3.5 volt	+3.5 V	23	–3.25 volt remote sense	–3.25 V
10	+3.5 volt remote sense	+3.5 V	24-30	–3.25 volt	–3.25 V
11	+12 volt	+12 V	31	–5.2 volt current limit	+2.5 V
12	–12 volt	–12 V	32	–5.2 volt remote sense	–5.2 V
13	Not connected		33-37	–5.2 volt	–5.2 V
14-20	Ground	0 V	38	Remote on/off	+12 V

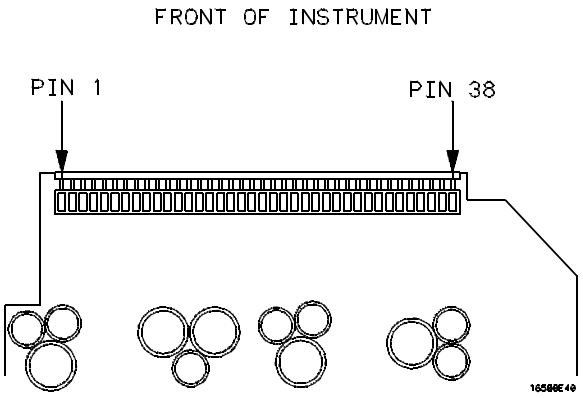

To test the flexible disk drive voltages

Refer to chapter 6, "Replacing Assemblies," for instructions to remove or replace covers and assemblies.

WARNING Hazard voltages exist on the power supply, the CRT, and the CRT driver board. This procedure is to be performed by service-trained personnel aware of the hazards involved, such as fire and electrical shock.

Equipment Required

Equipment	Critical Specification	Recommended Model/Part
Digitizing Oscilloscope	> 100 MHz Bandwidth	HP 54600A

1. Turn off the instrument, then remove the power cable. Remove the instrument cover and the flexible disk drive.
2. Reconnect the disk drive cable to the rear of the disk drive. Turn the disk drive over so that the solder connections of the cable socket are accessible.
3. Connect the power cable, then turn on the instrument.
4. In the Mainframe Test menu, select the Flexible Disk Test. Insert a disk that has enough available bytes to run the test in the disk drive, then select Run-Repetitive.

   Refer to "To run the self-tests" in this chapter if you need help accessing the test menu.

5 Check for the following voltages and signals using an oscilloscope.

Disk Drive Voltages

Pin	Signal Description	Pin	Signal Description	Pin	Signal Description
1	NC	13	Ground	24	Write Gate
2	Disk Change	14	NC	25	Ground
3	NC	15	Ground	26	Track 00
4	High Density	16	Motor On	27	Ground
5	NC	17	Ground	28	Write Protect
6	NC	18	Direction	29	Ground
7	+5 V	19	Ground	30	Read Data
8	Index	20	Step	31	Ground
9	+5 V	21	Ground	32	Side Select
10	Drive Select	22	Write Data	33	Ground
11	+5 V	23	Ground	34	Ready
12	NC				

6 Select Stop, and turn off the logic analyzer. Remove the power cable.
7 Disconnect the disk drive cable and reinstall the disk drive in the mainframe.
8 Reconnect the disk drive cable and install the cover on the mainframe.

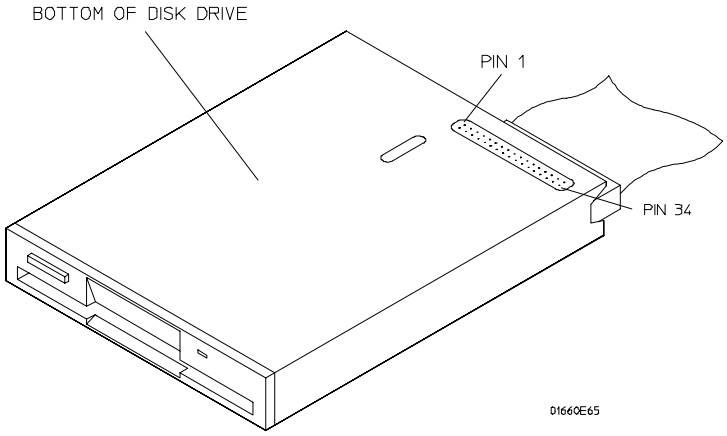

To test the hard disk drive voltages

Refer to chapter 6, "Replacing Assemblies," for instructions to remove or replace covers and assemblies.

WARNING Hazard voltages exist on the power supply, the CRT, and the CRT driver board. This procedure is to be performed by service-trained personnel aware of the hazards involved, such as fire and electrical shock.

Equipment Required

Equipment	Critical Specification	Recommended Model/Part
Digitizing Oscilloscope	> 100 MHz Bandwidth	HP 54600A

1. Turn off the instrument, then remove the power cable. Remove both the top and bottom covers of the mainframe and set the mainframe on its side with the strap handle facing up.
2. If an HP 16500L module is installed, then remove it from the mainframe.
   - **a** Disconnect the three cables plugged into the HP 16500L by reaching through the top of the mainframe and removing the plugs.
   - **b** Remove the screws attaching the HP 16500L to the mainframe. Refer to chapter 6 for more complete instructions to remove the HP 16500L.
3. Remove the four screws holding the hard disk drive and let the hard disk drive hang by the power and the data cables. Do not let the hard disk drive contact the CPU board.
4. Connect the power cable and apply power to the mainframe. When the hard disk drive begins spinning, ensure the disk drive does not contact the CPU board. When the mainframe has powered up, enter the Test System.
5. When the System Test menu appears, select Mainframe Test, then select Disk Test. When the disk test menu appears, select Run-Repetitive.
6. Using an oscilloscope, check for activity on the pins. Probe the voltages on the hard disk drive circuit board where the data cable connector is soldered. Pin 1 of the connector is marked on the circuit board and is on the side of the connector closest to the power cable.

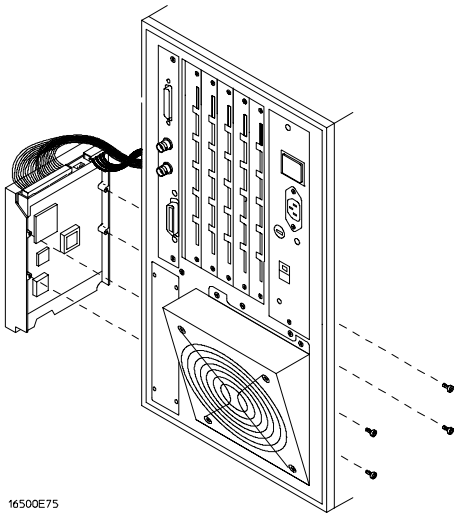

Disk Drive Voltages

Pin	Signal Description	Pin	Signal Description	Pin	Signal Description
1	Reset	15	Data	29	+5 V
2	Ground	16	Data	30	Ground
3	Data	17	Data	31	Interrupt Request
4	Data	18	Data	32	NC
5	Data	19	Ground	33	Address
6	Data	20	(connector key pin)	34	NC
7	Data	21	NC	35	Address
8	Data	22	Ground	36	Address
9	Data	23	Write Strobe	37	Register Select
10	Data	24	Ground	38	Register Select
11	Data	25	Read Strobe	39	NC
12	Data	26	Ground	40	Ground
13	Data	27	I/O Cycle Extend		
14	Data	28	NC		

7 If the hard disk drive signals appear as indicated, then the hard disk drive should be replaced. If the signals do not appear, then either the data cable or the CPU board is suspect. J12 of the CPU board can be probed in the same manner as described above to check for the same signals.

8 Select Stop, and turn off the mainframe. Remove the power cable and replace the faulty assembly.

9 Reassemble the mainframe.

To test the expansion frame interface

This procedure is used during troubleshooting to isolate a failed interface component, the interface cable, the expansion frame interface card, or the HP 16500L. The Option Board Test in the performance verification software generates bit patterns across the data, address, and strobe lines of the interface. Isolation is done by using an oscilloscope to check activity on the address and data buses and the strobe signal lines.

Refer to chapter 6, "Replacing Assemblies," for instructions to remove or replace covers and assemblies.

WARNING

Hazard voltages exist on the power supply, the CRT, and the CRT driver board. This procedure is to be performed by service-trained personnel aware of the hazards involved, such as fire and electrical shock.

Equipment Required

Equipment	Critical Specification	Recommended Model/Part Number
Oscilloscope	100MHz Bandwidth	HP 54600A

Before beginning this procedure, verify that the HP 16500L interface is properly installed and that the expansion frame interface card and interface cable are properly seated.

Set up the Expansion Frame

1. Remove power from the HP 16500B system and unplug the power cords from both the mainframe and the expansion frame.
2. Set the expansion frame on its side with the strap handle facing up. Remove the bottom cover from the expansion frame.
3. Plug the power cords into both the mainframe and expansion frame, then apply power.
4. In the System Configuration menu, select Configuration. Select Test , then touch the box to load the test system.
5. Select Test, then select Mainframe Tests in the pop-up menu. Select Option Board Tests, then select Run-Repetitive.

Test the Expansion Interface Card

1 Ground the oscilloscope probe to the metal portion of the frame near the rear panel of the expansion frame and check for TTL activity on the following pins.

- U7 pins 11 through 18
- U8 pins 2 through 9
- U9 pins 5 through 9

If there is TTL activity on all of the pins indicated, then the signal paths from the mainframe CPU board and the end of the expansion frame interface card are considered working. Go to the next step.

If one or more of the signal lines do not show activity, then go to "Test the Mainframe CPU Board" on the next page.

2 With the oscilloscope probe still grounded to the expansion frame, probe the following pins.

- U7 pins 2 through 9
- U8 pins 11 through 18
- U9 pins 11 through 15

If all of the signal lines show TTL activity, then go to the next step.

If one or more of the signal lines do not show TTL activity, then replace the expansion frame interface board.

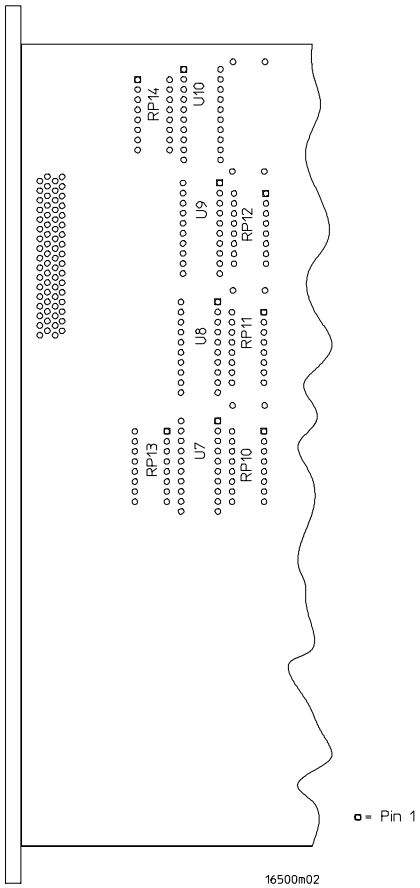

Bottom Side of Expansion Interface Card

3 Remove the probe ground from the frame, and reattach the probe ground to the metal portion of the expansion frame near the front panel.

4 Probe the following pins.

- U1 pins 2 through 9
- U2 pins 2 through 9
- U3 pins 5 through 9

If all of the signal lines show TTL activity, then go to the next step.

If one or more of the signal lines do not show TTL activity, then replace the expansion frame interface board.

5 With the oscilloscope probe still grounded to the frame, probe the following pins.

- U1 pins 11 through 18
- U2 pins 11 through 18
- U3 pins 11 through 15

If one or more of the signal lines do not show TTL activity, then replace the expansion frame interface board.

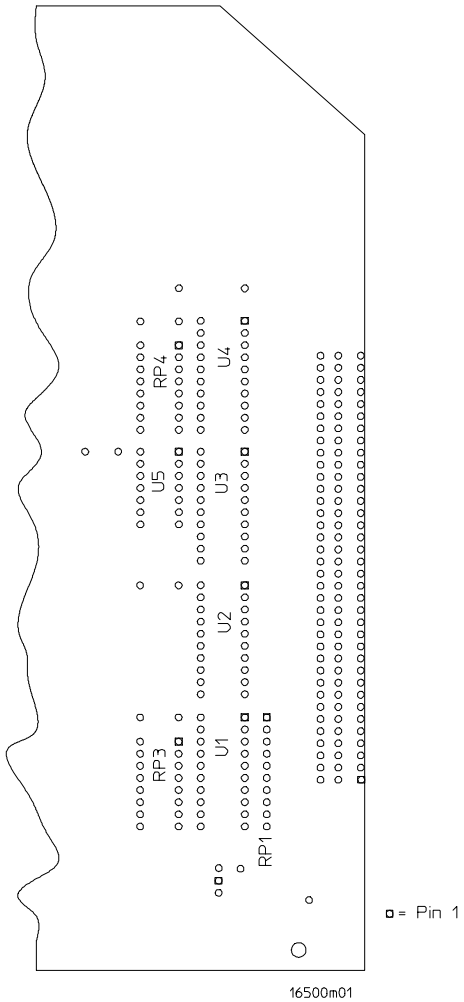

Bottom Side of Expansion Interface Card

Test the Mainframe CPU Board

1. Remove power from the HP 16500B system and unplug the power cords from both the mainframe and the expansion frame.
2. Reinstall the bottom cover on the expansion frame. Set the mainframe on its side with the strap handle facing up, then remove the bottom cover.
3. Plug the power cords into both the mainframe and expansion frame, then apply power.
4. In the System Configuration menu, select Configuration. Select Test, then touch the box to load the test system.
5. Select Test, then select Mainframe Tests. Select Option Board Tests, then select Run-Repetitive.
6. Ground the oscilloscope probe to the metal portion of the frame near the rear panel of the mainframe and check for TTL activity on the following pins. Reference designator J10 is indicated on the bottom side of the CPU board.
   - J10 pins 11 through 18
   - J10 pins 21 through 28
   - J10 pins 48 through 50

   If there is TTL activity on all of the pins indicated, then the mainframe CPU board is operational.

   If one or more of the signal pins on the expansion frame interface board did not show TTL activity, then the HP 16500L or the interface cable are suspect. Using an ohm meter, check continuity of the interface cable.

   If the interface cable is good, then replace the HP 16500L circuit board.
7. Remove power from the HP 16500B system, and unplug the power cords from both the mainframe and expansion frame. Replace the faulty components, then reassemble the mainframe.

6

To remove and replace the
- Optional modules or filler panels 6-3
- Covers 6–4
- Flexible disk drive 6–5
- Power supply 6–6
- Rear fan 6–8
- Side fan 6–9
- HP 16500L interface module 6–10
- Hard disk drive 6–12
- Microprocessor board (CPU) 6–13
- SIMM memory module 6–14
- Expansion interface board 6–15
- Mother board 6–16
- Front-Panel board 6–18
- Color display assembly 6–19

To return assemblies 6–22

Replacing Assemblies

Replacing Assemblies

This chapter contains the instructions for removing and replacing the assemblies of the logic analysis system. Also in this chapter are instructions for returning assemblies.

WARNING

Hazardous voltages exist on the power supply, the CRT, and the CRT driver board. To avoid electrical shock, disconnect the power from the instrument before performing the following procedures. After disconnecting the power, wait at least six minutes for the capacitors on the power supply board and the CRT driver board to discharge before servicing the instrument. However, if the AC LED on the power supply has any illumination, a significant charge remains on the power supply capacitors.

CAUTION

Damage can occur to electronic components if you remove or replace assemblies when the instrument is on or when the power cable is connected. Never attempt to remove or install any assembly with the instrument on or with the power cable connected.

Replacement Strategy

These replacement procedures are organized as if disassembling the complete instrument, from the first assembly to be removed to the last. Some procedures say to remove other assemblies of the instrument, but do not give complete instructions. Refer to the procedure for that specific assembly for the instructions.

CAUTION

Electrostatic discharge can damage electronic components. Use grounded wriststraps and mats when performing any service to this logic analyzer.

Tools Required

#10, #15, #25 TORX screwdrivers
#2 posidrive screwdriver
8-mm nut driver

To remove and replace optional modules or filler panels

1 To reconfigure your system later in this procedure, note the configuration of your system.

Some modules for the Logic Analysis System require calibration if you move them to a different slot.

2 Starting from the top, loosen the thumb screws on filler panels and cards in the mainframe or the expansion frame. Starting from the top, pull the cards and filler panels out.

All multicard modules will be cabled together. To prevent damage to the cables and connectors, pull all multicard modules out together.

3 To replace the modules, reposition all cards and filler panels so that the endplates overlap properly.

4 Firmly seat the bottom card into the backplane connector of the mainframe. Keep applying pressure to the center of the card endplate while tightening the thumb screws finger tight. Repeat for all cards and filler panels in a bottom to top order.

For correct air circulation, filler panels must be installed in all unused card slots. Correct air circulation keeps the instrument from overheating. Keep any extra filler panels for future use.

See Also

Service Guides for each individual module.

To remove and replace the covers

There are four outside covers on the HP 16500B and on the HP 16501A, a top cover, a bottom cover, and two side covers.

When removing the covers, note where the shielding braid is located. If the shielding braid separates from the covers, reinstall it when replacing the covers. The shielding braid helps the instrument meet EMI (electromagnetic interference) specifications.

1 **Remove the four rear feet.**

The screws connecting the feet to the frame are accessible through the holes in the end of the feet.

2 **Remove the top and bottom covers.**

To remove the covers, loosen the screw in the rear of the covers. If a captive screw was used, loosening the screw will pull the cover back. When the screw is completely loose from the frame, slide the cover off. To remove the bottom cover, turn the instrument on its side, then loosen the screw in the rear of the bottom cover.

3 **Remove the side strap handle and side covers.**

To remove the side strap handle, remove the two strap retaining screws. Slide the strap handle cover off.

Note that the handle is rounded on the side closest to the instrument. Reinstall the handle with the same side toward the instrument.

To remove a side cover, loosen the screw in the rear of the cover. (The side cover with a strap handle will not have a rear screw.) If a captive screw was used, loosening the screw will pull the cover back. When the screw is completely loose from the frame, slide the cover off.

4 **Replace the covers by reversing this procedure.**

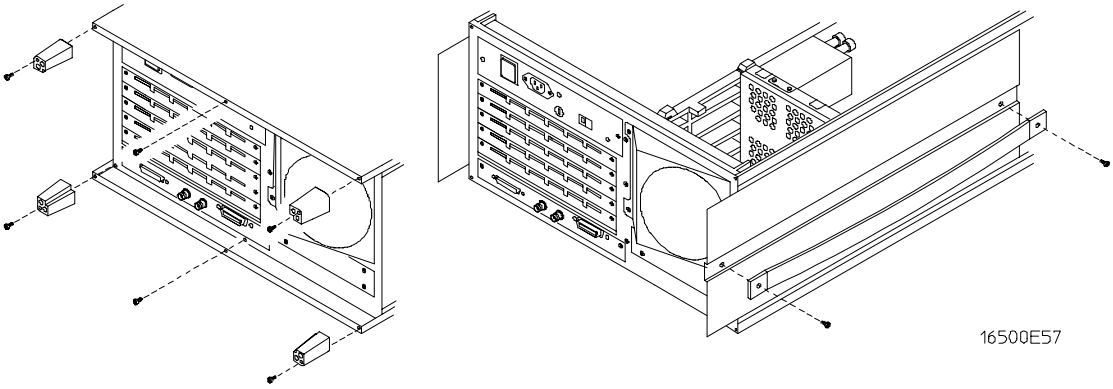

To remove and replace the flexible disk drive

HP 16500B

1 Using previous procedures, remove the following assemblies:
   - Top cover
2 Remove the two disk drive mounting screws.
3 Slide the flexible disk drive assembly toward the rear panel until the assembly is out of the instrument.
4 Disconnect the control cable for the disk drive.
5 Remove the mounting bracket from the bottom of the assembly.
6 Reverse this procedure to replace the flexible disk drive.

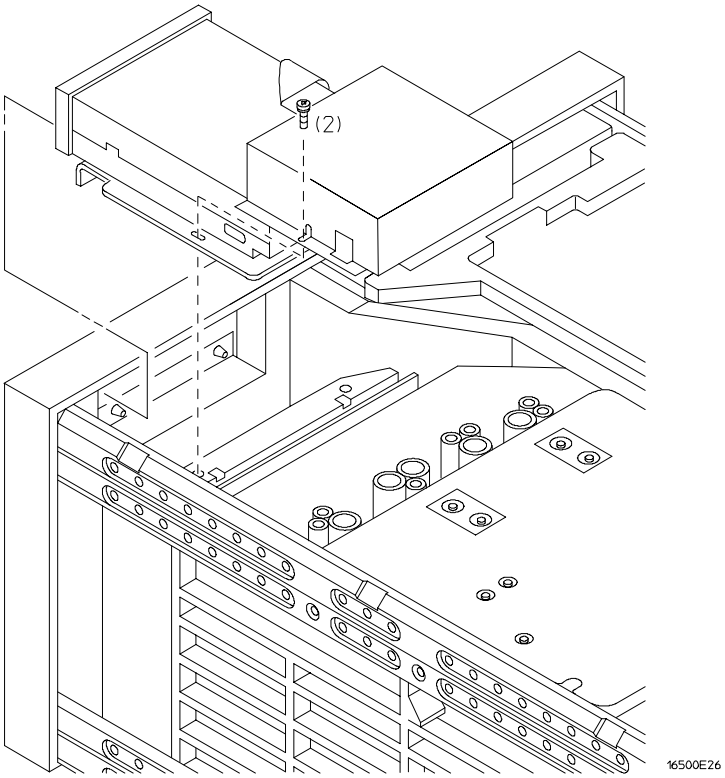

To remove and replace the power supply

WARNING

Hazardous voltages exist on the power supply. To avoid electrical shock, disconnect the power from the instrument before performing the following procedures. After disconnecting the power, wait at least six minutes for the capacitors on the power supply board to discharge before servicing the instrument. However, if the AC LED on the power supply has any illumination, a significant charge remains on the capacitors.

HP 16500B

1 Using previous procedures, remove the following assemblies:
   - Top cover
   - Flexible disk drive assembly
   - Optional module card or filler panel in the top slot of the card cage
2 Remove the power supply rear panel.
3 Disconnect the color display to power supply cable from the power supply.
4 Remove the four power supply mounting screws.
5 Pull the power supply towards the rear panel of the mainframe until the power supply disconnects from the mother board connector.
6 Lift the front end of the power supply and guide it out of the mainframe.
7 Reverse this procedure to install the replacement power supply.

   Before pushing the power supply into place, make sure that it is properly aligned with the front connector of the mother board and with the rail guides of the card cage.

HP 16501A

1 Using previous procedures, remove the following assemblies:
   - Top cover
   - Optional module card or filler panel in the top slot of the card cage
2 Remove the power supply rear panel.
3 Remove the four power supply mounting screws.
4 Pull the power supply towards the rear panel of the expansion frame until the power supply disconnects from the mother board connector.
5 Lift the front end of the power supply and guide it out of the expansion frame.
6 Reverse this procedure to install the replacement power supply.

   Before pushing the power supply into place, make sure that it is properly aligned with the front connector of the mother board and with the rail guides of the card cage.

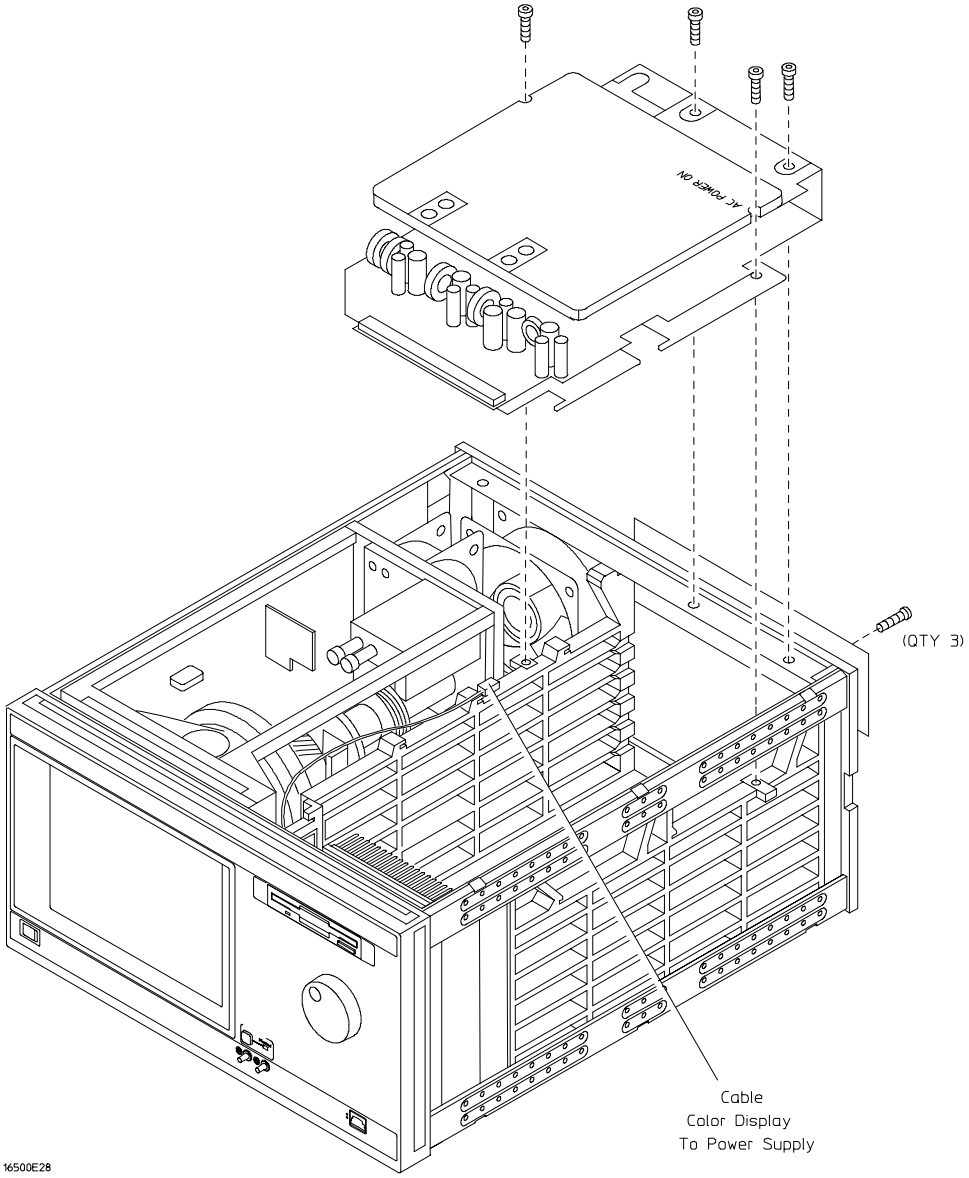
AC POWER ON
(QTY 3)
Cable
Color Display
To Power Supply
16500E28

To remove and replace the rear fan

HP 16500B and HP 16501A

1 Using previous procedures, remove the following assemblies:
   - Top cover
2 Remove the rear fan shroud mounting screws.
3 Remove the complete rear fan assembly from the rear panel of the instrument.
4 Disconnect the rear fan power cable.
5 Remove the rear fan mounting screws and remove the fan from the fan shroud.
6 Reverse this procedure to install the replacement rear fan.

   Make sure that the fan power cable is dressed under and between the fans and that the cable polarity is observed.

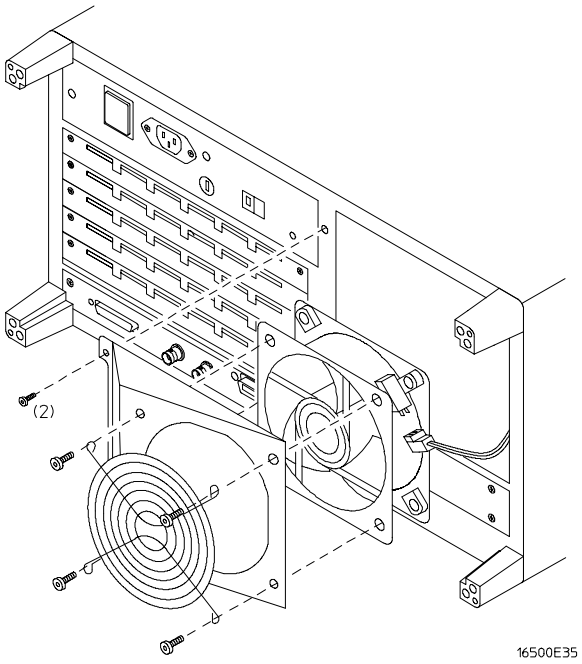

To remove and replace the side fan

HP 16500B and HP 16501A

1 Using previous procedures, remove the following assemblies:
   - Top cover and side cover
2 Remove the four side fan mounting screws.
3 Reach through the top of the instrument and disconnect the fan power cable, then remove the fan.
4 Reverse this procedure to install the replacement side fan.

   Make sure that the fan power cable is dressed under and between the fans and that the cable polarity is observed.

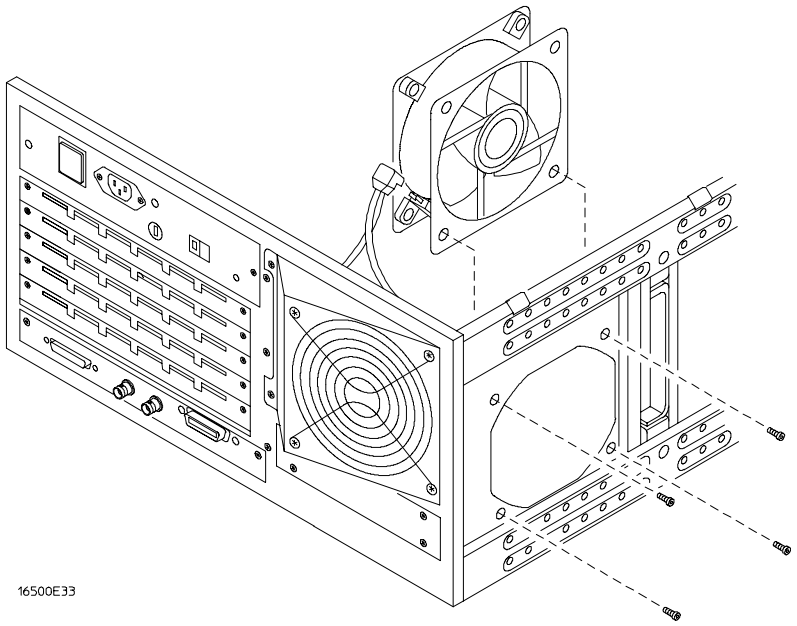

To remove and replace the HP 16500L interface module

HP 16500B and HP 16500L

1. Using previous procedures, remove the following assemblies:
   - Top cover
2. If your system includes an expansion frame, disconnect the interface cable from the HP 16500L interface module by pressing the release tabs on either side of the cable connector while pulling the connector away from the card.
3. Disconnect the cable from the HP 16500L interface module to the CRT monitor and the two cables from the HP 16500L interface module to the CPU card.
4. Remove the two screws connecting the HP 16500L interface module to the sheet metal plate and the four screws connecting the HP 16500L interface module to the mainframe rear panel.
5. Slide the card out the back of the mainframe.
6. Insert the replacement card in the back of the mainframe, then install the screws and connect the cables.

The module serial number is located on the module rear panel. If you need to keep the same serial number with your system, then remove the rear panel from the old interface module and install it on the replacement module. The module rear panel is connected to the module circuit board with four screws.

7 If your system includes an expansion frame, connect the interface cable from the expansion frame to the HP 16500L interface module located in the HP 16500B mainframe.

In order to ensure correct connection of the interface cable, the 68-pin "D" connectors on the cable are asymmetric in shape. They only fit into the ports on the cards when oriented to match the shape of the ports.

When reconnecting the interface cable, make sure the cable connector is properly seated into the port on the expansion interface card by pulling the cable connector without pressing the release tabs. If the connector is properly seated, it will remain connected to the port.

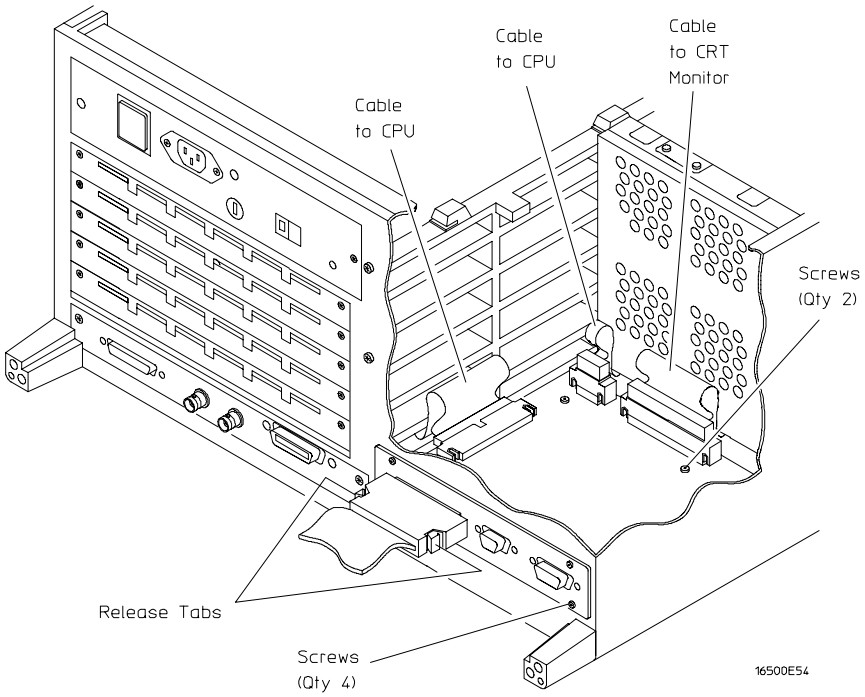

To remove and replace the hard disk drive

HP 16500B

1 Using previous procedures, remove the following assemblies:
   - Top and bottom covers
   - HP 16500L interface module
2 Reaching in from the top of the instrument, remove the four screws connecting the hard disk drive to the bracket.
3 Reaching in from the bottom of the instrument, remove the hard disk drive.
4 Disconnect the two cables from the hard disk drive to the CPU board.
5 Reverse this procedure to install the replacement hard disk drive.

Verify that the jumper on the underside of the hard disk is in the E1 position.

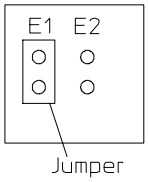

The replacement hard disk might be fastened to a mounting bracket when received. Before installing the hard disk, remove the mounting bracket If the replacement hard disk is an exchange assembly, attach the mounting bracket to the faulty disk drive before returning it to Hewlett-Packard. If the replacement disk drive is a new assembly, discard the mounting bracket.

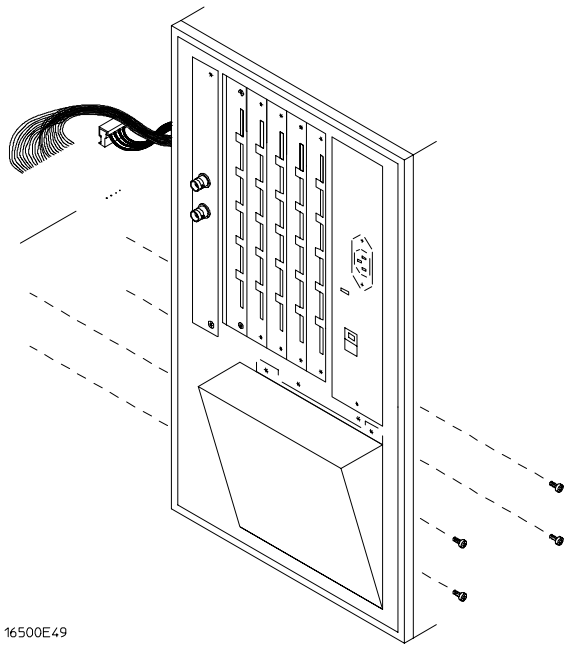

To remove and replace a SIMM memory

HP 16500B

1. Using previous procedures, remove the following assemblies:
   - Microprocessor (CPU) board
2. Hold the release tabs away from the SIMM (single inline memory module), then pull the module out.
3. Reverse this procedure to install the replacement SIMM.

   Slide the SIMM module into the connector at an angle, then push it down parallel to the microprocessor board.

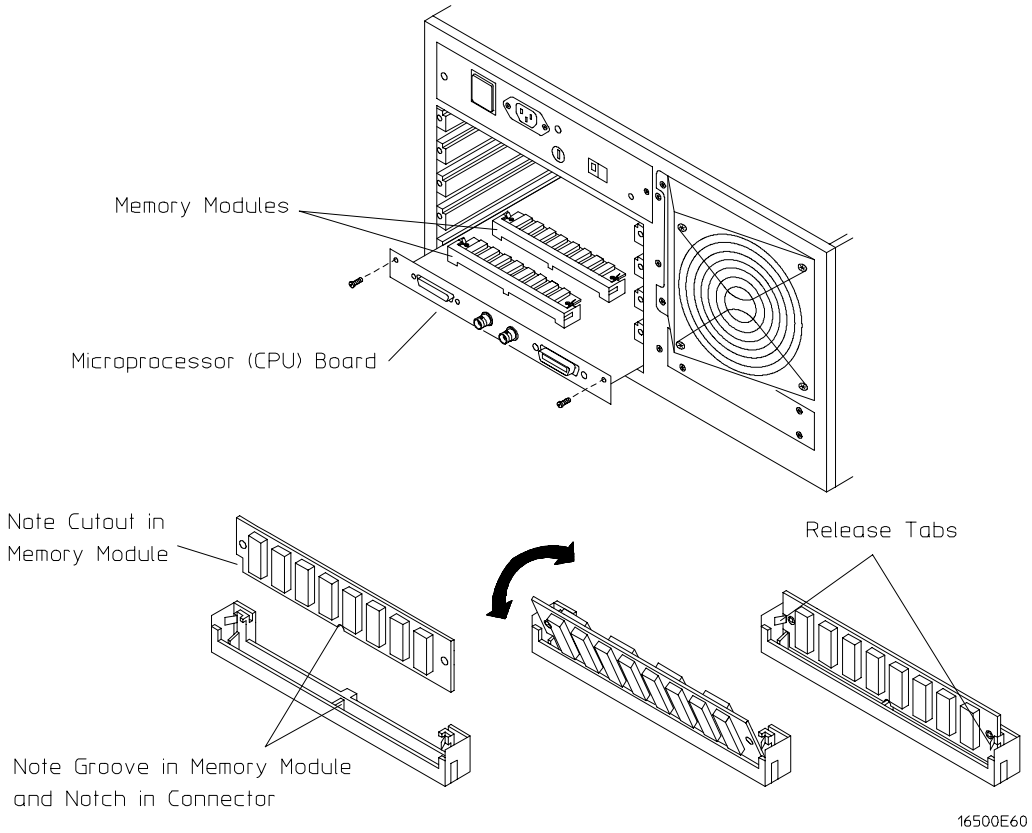

To remove and replace the expansion interface board

HP 16501A

1 Using previous procedures, remove the following assemblies:
   - Bottom cover
   - All optional modules and filler panels
2 Disconnect the interface cable by pressing the release tabs on either side of the cable connector while pulling the cable connector away from the board.
3 Disconnect the two cables on the expansion interface board. One cable is connected to the front-panel LED and one cable is connected to the mother board.
4 Remove the two screws connecting the expansion interface board to the rear panel of the expansion frame.
5 Carefully slide the expansion interface board out of the expansion frame.
6 Reverse this procedure to install the replacement expansion interface board.

   In order to ensure correct connection of the interface cable, the 68-pin "D" connectors on the cable are asymmetric in shape. They only fit into the ports on the boards when oriented to match the shape of the ports.

   When reconnecting the interface cable, make sure the cable connector is properly seated into the port on the expansion interface board by pulling the cable connector without pressing the release tabs. If the connector is properly seated, it will remain connected to the port.

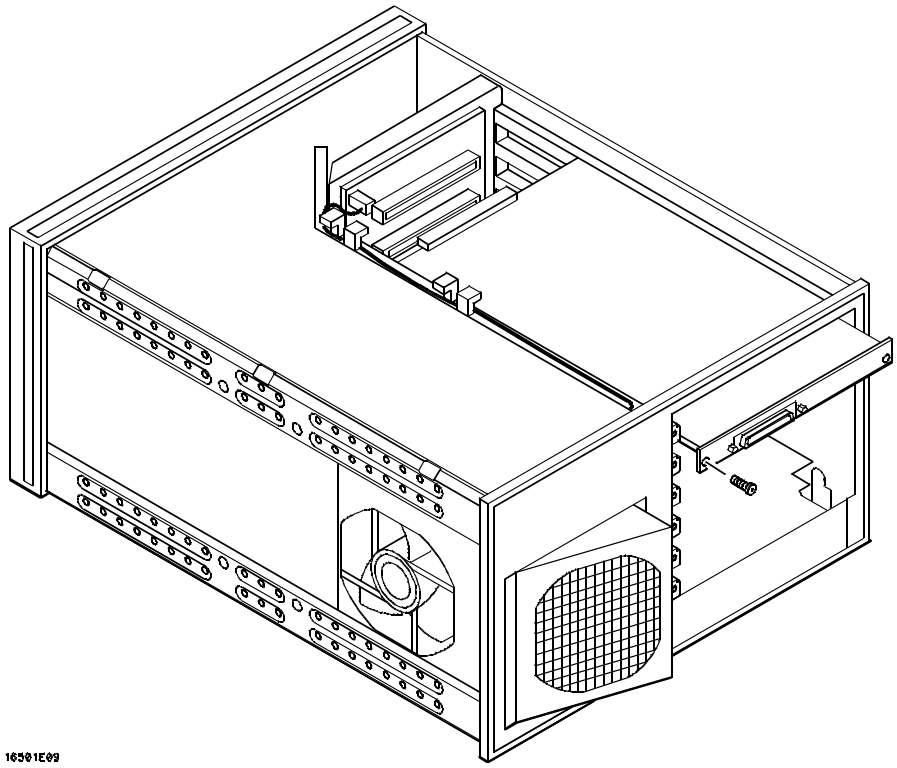

To remove and replace the mother board

HP 16500B

1 Using previous procedures, remove the following assemblies:
   - Top and bottom covers
   - Power supply
   - Microprocessor board
   - All optional modules and filler panels
2 Set the frame so that the bottom of the frame is facing up. This is to gain access to the fan power cable and the front-panel cable.
3 Disconnect the fan power cable and the front-panel cable from the mother board.
4 Remove the six mother board mounting screws, then lift the mother board out of the mainframe.
5 Reverse this procedure to install the replacement mother board.

HP 16501A

1 Using previous procedures, remove the following assemblies:
   - Top and bottom covers
   - Power supply
   - Expansion interface board
   - All optional modules and filler panels
2 Set the frame so that the bottom of the frame is facing up. This is to gain access to the fan power cable and the front-panel cable.
3 Disconnect the fan power cable from the mother board.
4 Remove the six mother board mounting screws, then lift the mother board out of the expansion frame.
5 Reverse this procedure to install the replacement mother board.

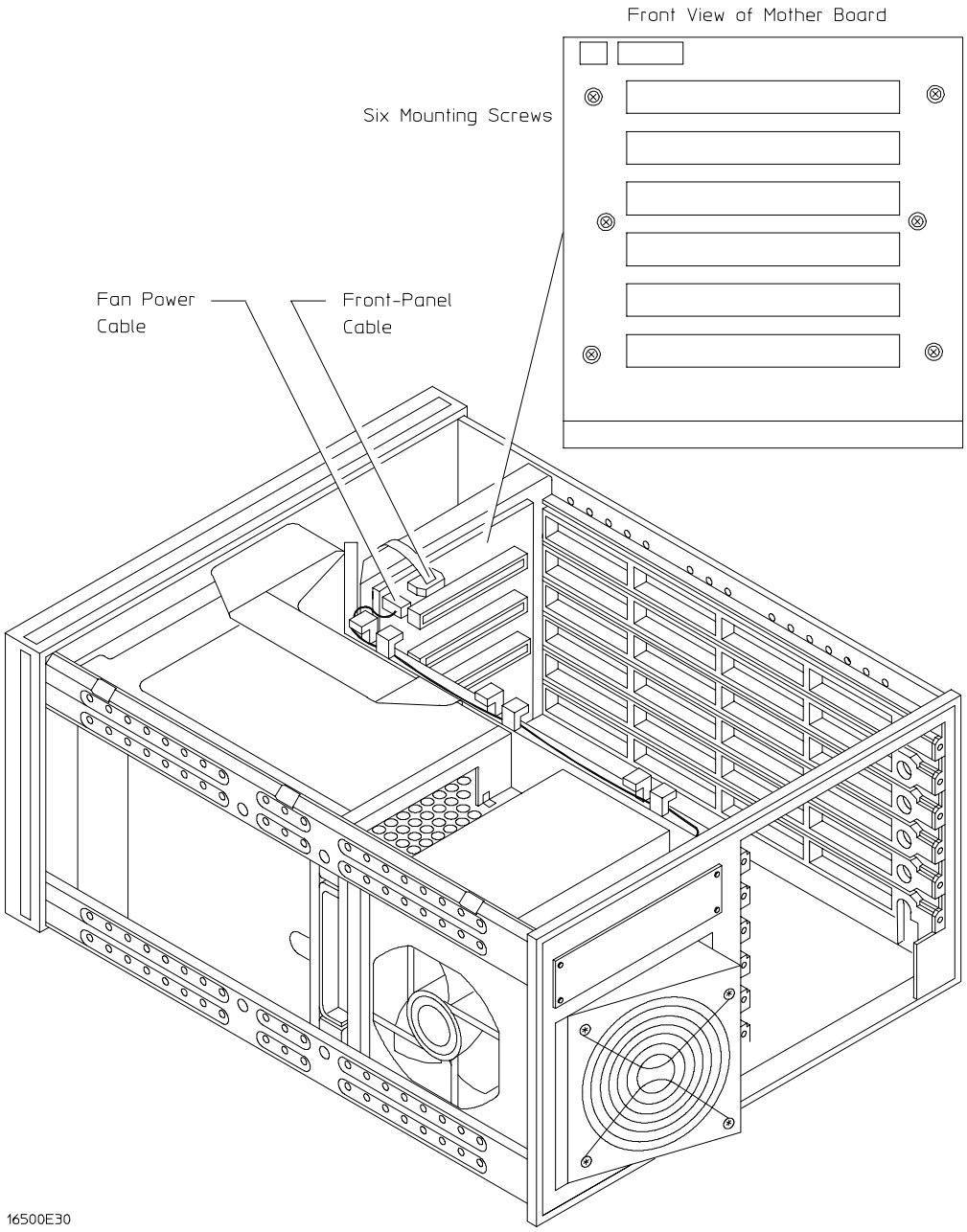
Front View of Mother Board
Six Mounting Screws
Fan Power Cable
Front-Panel Cable
16500E30

To remove and replace the front-panel board

HP 16500B

1. Remove the top trim from the front frame.
2. Disconnect the two cables from the front-panel board.

   One cable is connected to the color display assembly and one cable is connected to the mother board.
3. Remove the screws connecting the front-panel assembly to the top and bottom of the frame.
4. Remove the front-panel assembly by pushing on the back of the assembly from inside the instrument.
5. Carefully remove the shield from the assembly.

   The shield is very fragile and must be replaced if it is bent or damaged in any way.
6. Remove the bezel from the front-panel board.
7. Remove the RPG knob and the two CRT control knobs by pulling them away from the front-panel.
8. Remove the screws connecting the front-panel board to the front-panel, then remove the front-panel board.
9. Reverse this procedure to install the replacement front-panel board.

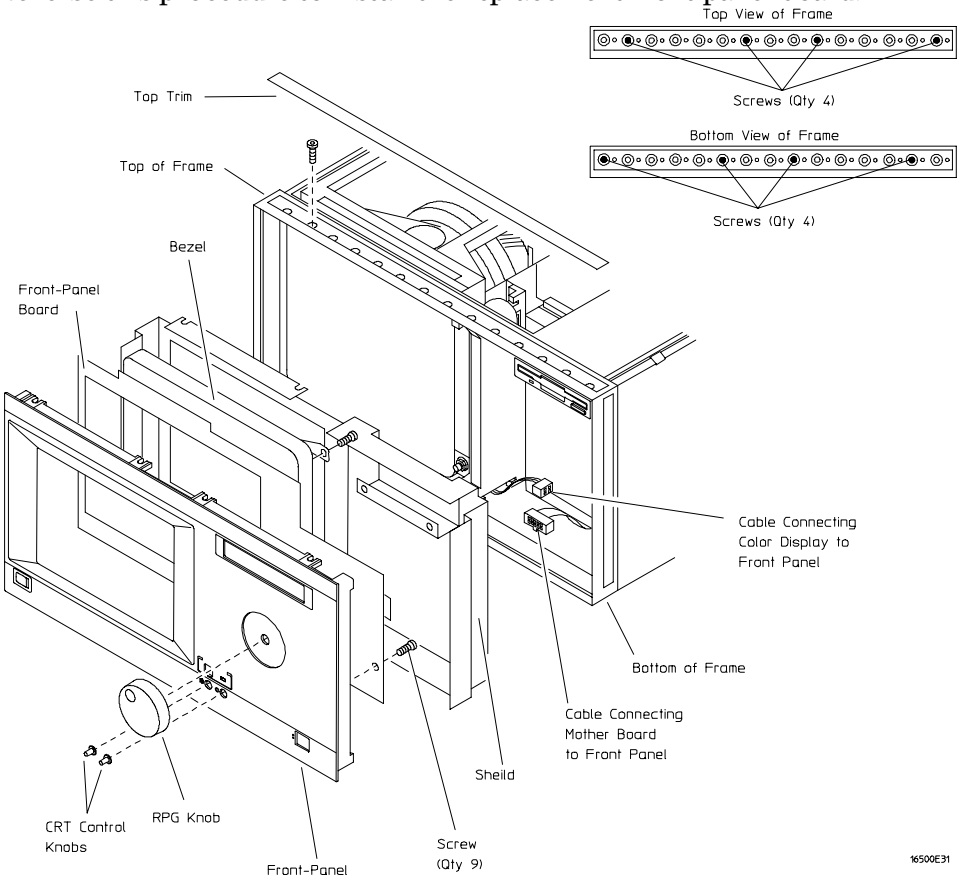

To remove and replace the color display assembly

HP 16500B

The color display assembly replacement procedure consists of three sections:

Removing the assembly from the mainframe.

Transferring parts to the replacement assembly.

Installing the assembly in the mainframe.

Removing the color display assembly from the mainframe

1 Using previous procedures, remove the following assemblies:
   - All covers
   - Front-panel assembly
2 Disconnect the color display to microprocessor cable from the microprocessor board. Disconnect the color display to power supply cable from the power supply.
   If an HP 16500L is installed, disconnect the cable from the color display to the HP 16500L.
3 Remove the screws that connect the rear mounting bracket on the display assembly to the side of the mainframe.
4 Remove the screws that connect the color display to the top and bottom of the front frame.
5 Remove the screws that connect the center board guide to the front frame. Move the sheet metal nuts, located on the center board guide, so that the display assembly can clear the mainframe.
6 Slide the complete color display assembly forward out of the mainframe. To prevent damage to the assembly cables, make sure that they also clear the frame.

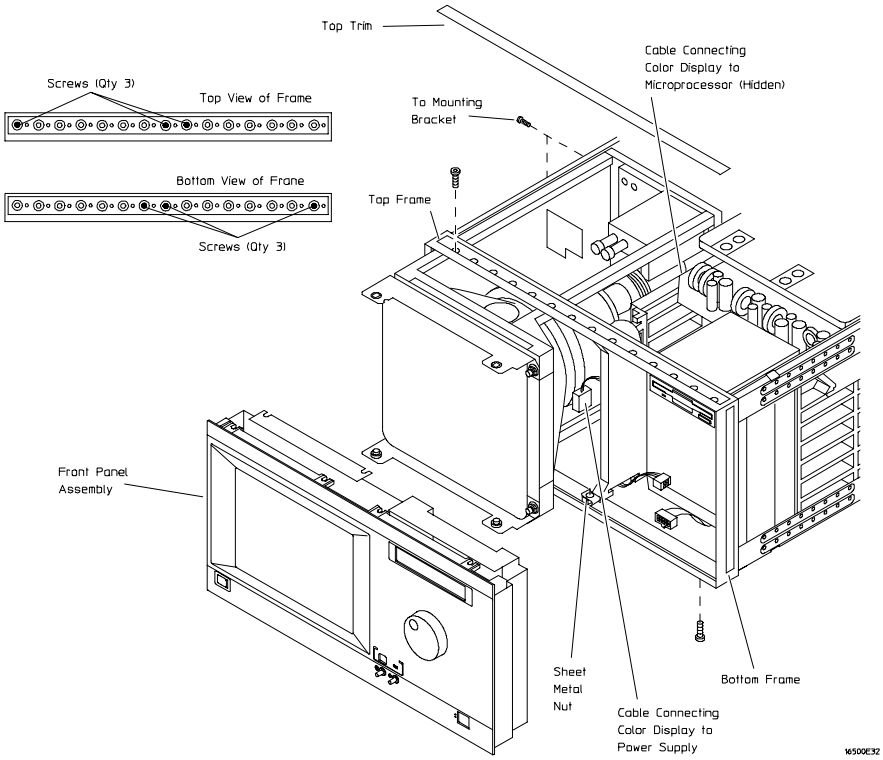

Transferring parts to the replacement assembly

The purpose of this procedure is to transfer the mechanical parts from the old assembly to the replacement assembly.

1 Remove the rear mounting bracket from the rear support bracket. Remove the rear support bracket from the color display assembly.
2 Attach the rear support bracket to the replacement assembly, using the two thread-forming screws. Do not overtighten.
3 Attach the frame mounting bracket to the rear support bracket. Install the hardware in the following sequence: screw, flat washer, rubber washer. Do not tighten the hardware.
4 Remove the four bracket nuts connecting the front mounting brackets to the old assembly, then remove the front mounting brackets. Reinstall the bracket nuts on the old assembly.
5 Remove the four bracket nuts from the replacement assembly. Using the four bracket nuts, install both front mounting brackets on the replacement display assembly. The upper bracket is identified by the notch on one edge.
6 Disconnect the flat microprocessor cable, the power cable, and the front-panel control cable from the old assembly, noting the location of the cables. Connect the cables to the replacement assembly.

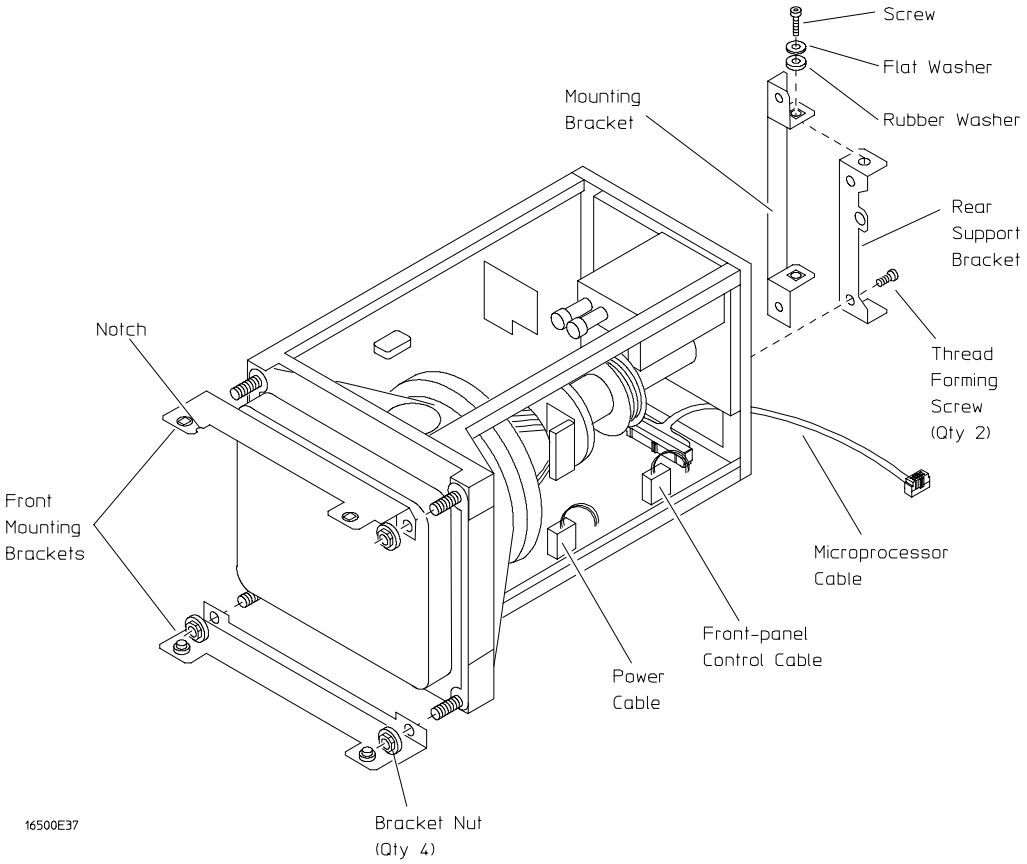

Installing the replacement color display assembly

1. Carefully slide the color display assembly most of the way into the mainframe. To prevent damage to the cables, make sure that they clear the mainframe.
2. Connect the color display to power supply cable to the power supply. Slide the display assembly completely into the mainframe.
3. Attach the display assembly to the front frame with four screws (two on the top casting and two on the bottom casting). Do not tighten the screws.
4. Move the sheet metal nuts, located on the front tabs of the center board guide, so that the holes in the sheet metal nuts and the tabs line up. Attach the front tabs of the center board guide to the front frame.
5. Reinstall the front-panel assembly, connecting the front-panel cables. Make sure the front-panel assembly is properly seated before tightening the hardware.
6. Push the display assembly forward, until it is properly seated against the front-panel assembly. Tighten the four display assembly mounting screws in the front frame.
7. Attach the rear mounting bracket of the display assembly to the side frame, then tighten the mounting bracket screws. To prevent damage to the rubber washers, do not overtighten the screws.
8. Tighten all of the display assembly mounting hardware. Reconnect the flat color display to microprocessor cable to the microprocessor board.

   If an HP 16500L is installed, connect the cable from the color display assembly to the HP 16500L.
9. Reinstall all covers.

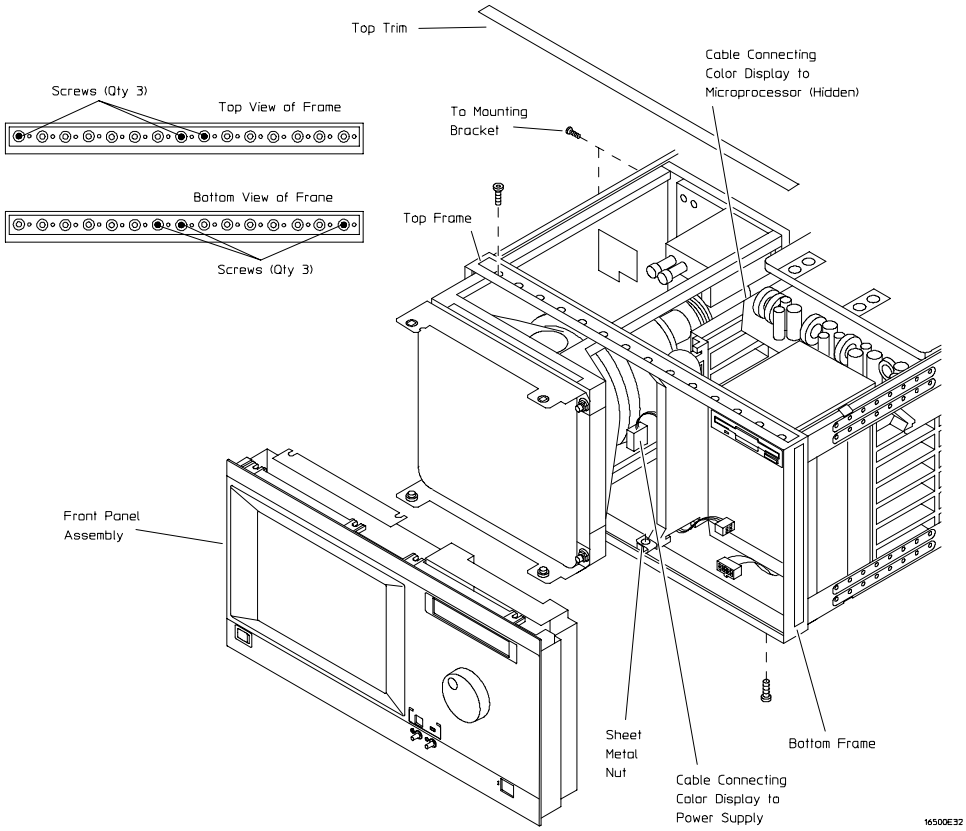

To return assemblies

Before shipping the logic analysis system or assemblies to Hewlett-Packard, contact your nearest Hewlett-Packard sales office for additional details.

1 Write the following information on a tag and attach it to the part to be returned.

- Name and address of owner
- Model number
- Serial number
- Description of service required or failure indications

2 Remove accessories from the logic analysis system.

Only return accessories to Hewlett-Packard if they are associated with the failure symptoms.

3 Package the logic analysis system or assemblies.

You can use either the original shipping containers, or order materials from an HP sales office.

CAUTION For protection against electrostatic discharge, package the logic analyzer in electrostatic material.

4 Seal the shipping container securely, and mark it FRAGILE.

7

Replaceable Parts Ordering 7–2
Replaceable Parts List 7–3
HP 16500B Exploded View and Replaceable Parts 7–4
HP 16501A Exploded View and Replaceable Parts 7–9

Replaceable Parts

Replaceable Parts

This chapter contains information for identifying and ordering replaceable parts for your logic analysis system.

Replaceable Parts Ordering

Parts listed

To order a part on the list of replaceable parts, quote the Hewlett-Packard part number, indicate the quantity desired, and address the order to the nearest Hewlett-Packard Sales Office.

Parts not listed

To order a part not on the list of replaceable parts, include the model number and serial number of the module, a description of the part (including its function), and the number of parts required. Address the order to your nearest Hewlett-Packard Sales Office.

Direct mail order system

Within the USA, Hewlett-Packard can supply parts through a direct mail order system. The advantages to the system are direct ordering and shipment from the HP Part Center in Mountain View, California. There is no maximum or minimum on any mail order. (There is a minimum amount for parts ordered through a local Hewlett-Packard Sales Office when the orders require billing and invoicing.) Transportation costs are prepaid (there is a small handling charge for each order) and there are no invoices.

In order for Hewlett-Packard to provide these advantages, a check or money order must accompany each order. Mail order forms and specific ordering information are available through your local Hewlett-Packard Sales Office. Addresses and telephone numbers are located in a separate document at the back of the Service Guide.

Exchange Assemblies

Some assemblies are part of an exchange program with Hewlett-Packard. The exchange program allows you to exchange a faulty assembly with one that has been repaired and performance verified by Hewlett-Packard.

After you receive the exchange assembly, return the defective assembly to Hewlett-Packard. A United States customer has 30 days to return the defective assembly. If you do not return the defective assembly within the 30 days, Hewlett-Packard will charge you an additional amount. This amount is the difference in price between a new assembly and that of the exchange assembly. For orders not originating in the United States, contact your nearest Hewlett-Packard Sales Office for information.

See Also

"To return assemblies" in chapter 6.

Replaceable Parts List Description

The replaceable parts list is organized by reference designation.
The exploded view does not show all of the parts in the replaceable parts list.

Information included for each part on the list consists of the following:

- Reference designator
- Hewlett-Packard part number
- Total quantity included with the instrument (Qty)
- Description of the part
-

Reference designators used in the parts list are as follows:

- A Assembly
- E Miscellaneous Electrical Part
- F Fuse
- H Hardware
- MP Mechanical Part
- W Cable

HP 16500B Exploded View and Replaceable Parts

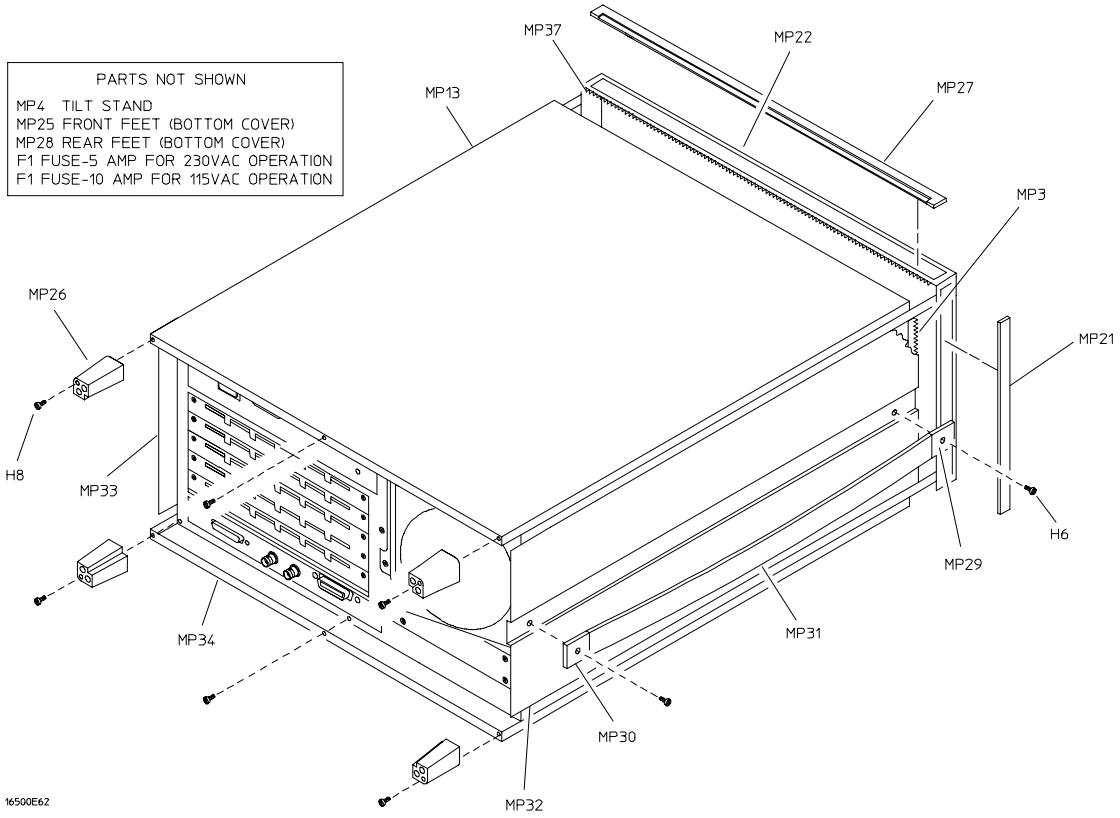

Exploded view of the HP 16500B External Parts

HP 16500B Replaceable Parts

Ref. Des.	HP Part Number	QTY	Description
Exchange Assemblies			
A2	16500-69512		Front-panel circuit board (exchange)
A3	16500-69509		Microprocessor board assembly (exchange)
A5	D2329-69001		Hard disk drive (exchange)
A6	16500-69500		Power supply (exchange)
A8	2095-0001		Color monitor assembly (exchange)
A9	D2156-69001		1MX36 SIMM module (exchange)
External Parts			
F1	2110-0010		Fuse - 5 amp for 230 Vac operation
F1	2110-0395		Fuse - 10 amp for 115 Vac operation
H6	0515-1384	2	Screw M5 X 0.8 10 MM-LG (side handle)
H8	0515-1444	4	Screw M3.5 X 0.6 25.4MM_LG (back feet)
MP3	0363-0125	4	RFI strip - fingers (top and bottom covers)
MP4	1460-1345	2	Tilt stand
MP13	16500-04102	1	Top cover
MP21	5001-0541	2	Side trim (front frame)
MP25	5041-8801	2	Feet - front (bottom cover)
MP26	54110-40502	4	Feet - back
MP27	5041-8802	1	Top trim strip (frame)
MP28	5041-8822	2	Feet - rear (bottom cover)
MP29	5041-8819	1	Strap handle cap - front
MP30	5041-8820	1	Strap handle cap - rear
MP31	5062-3704	1	Strap handle
MP32	5062-3847	1	Cover - left side (with handle)
MP33	5062-3822	1	Cover - right side (without handle)
MP34	5062-3747	1	Cover - bottom
MP37	8160-0551	6	EMI shielding - braided
W7	8120-1521	1	Power cord - United States (7.5 ft)
W7	8120-1703	1	Power cord (Option 900-UK)
W7	8120-0696	1	Power cord (Option 901-Austl)
W7	8120-1692	1	Power cord (Option 902-Eur)
W7	8120-2296	1	Power cord (Option 906-Swit)
W7	8120-2957	1	Power cord (Option 912-Den)
W7	8120-4600	1	Power cord (Option 917-Africa)
W7	8120-4754	1	Power cord (Option 918-Japan)
	01660-84501	1	Accessory pouch
	0515-1245		Replacement screw for top and bottom covers
	0510-1253		Replacement retaining ring for top and bottom covers

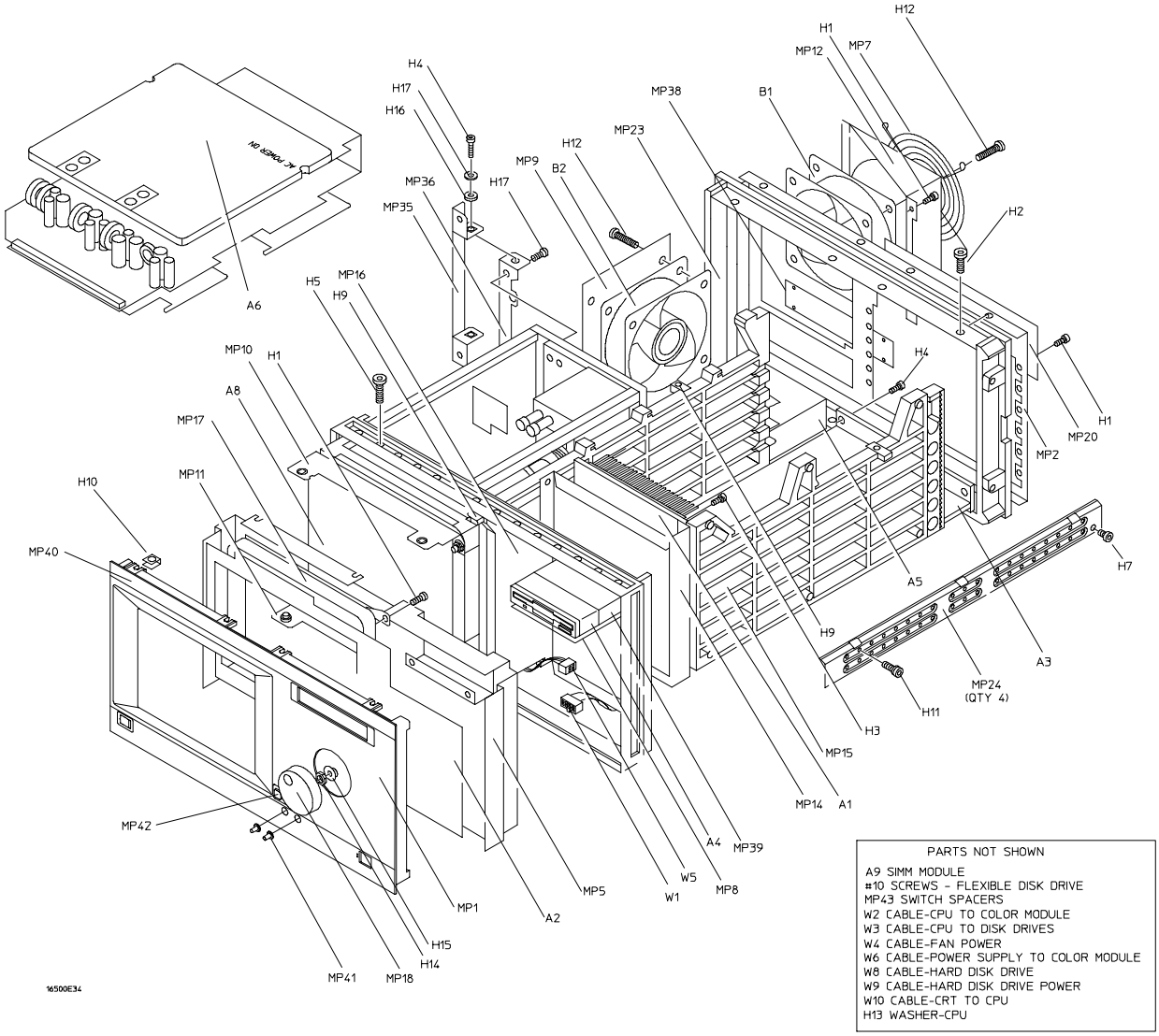

Exploded View of the HP 16500B

HP 16500B Replaceable Parts

Ref. Des.	HP Part Number	QTY	Description
Internal Parts			
A1	16500-66501	1	Mother board assembly
A3	16500-66509	1	Microprocessor board assembly
A4	0950-2169	2	Flexible disk drive
A5	D2329-60003		Hard disk drive
A6	0950-1853	1	Power supply assembly
A8	2090-0251	1	Color CRT module assembly
A9	1818-4703	2	1MX36 SIMM module
B1	3160-0829	2	Fan - tubeaxial
B2	3160-0829		Fan - tubeaxial
H1	0515-0372	31	Screw M3 X 0.5 8MM-LG
H2	0515-0433	8	Screw M4 X 0.7 10MM-LG (rear panel, center rib)
H3	0515-0435	6	Screw M4 X 0.7 14MM-LG (center rib, power supply)
H4	0515-0664	6	Screw M3 X 0.5 12MM-LG (color monitor bracket, CPU board)
H5	0515-0943	14	Screw M4 X 0.7 12MM-LG (color monitor to frame, front-panel to frame)
H7	0515-1403	16	Screw M4 X 0.7 6MM-LG 90-Deg FH (frame)
H9	0535-0105	4	Nut - sheet metal M4 (side card guide, center rib)
H10	0515-1363	4	Screw (flexible disk drive bracket)
H11	0624-0520	9	Screw TPG 6-19 .5-IN-LG (side card guide, center rib)
H12	2510-0332	8	Screw Mach 8-32 (fans)
H13	2190-0763	2	Washer FL MTLCH NO. 6 .14-IN-ID .5-IN-OD (CPU to rear panel)
H14	2950-0043	1	Nut - hex 3/8-32-THD .094-IN-THK (RPG)
H15	3050-0188	1	Washer - spcr 3/8-IN .385-IN-ID (RPG)
H16	3050-1238	2	Washer - FL NM 9/64 .149-IN-ID .478-IN-OD (color monitor bracket)
H17	0515-0641	2	Screw (color monitor bracket)
H19	2360-0462	4	Screw 6-32 0.25in Pan (hard drive)
MP2	16500-00204	1	Rear panel
MP7	3160-0092	1	Grill - rear fan
MP8	16500-01212	1	Bracket - flexible disk
MP9	16500-01213	1	Bracket - fan/disk
MP10	16500-01205	1	Bracket - color module top
MP11	16500-01206	1	Bracket - color module bottom
MP12	16500-01207	1	Fan shroud - rear
MP14	16500-04701	1	Mother board bracket
MP15	16500-23101	1	Card guide - side
MP16	16500-23102	1	Card guide - center
MP20	16500-61202	1	Power supply cover - rear panel
MP22	5021-8407	1	Frame - front
MP23	5021-5808	1	Frame - rear
MP24	5021-5837	4	Strut - corner
MP35	54110-01210	1	Bracket - color module rear
MP36	54110-04702	1	Support - color module rear
MP38	16500-04105	1	Cover plate
MP39	16500-00605	1	Shield - flexible disk drive
W1	16500-61601	1	Cable - mother board to front panel
W2	16500-61602	1	Cable - CPU to color module
W3	16500-61609	1	Cable - CPU to flexible disk drive (34 cond)
W4	16500-61604	1	Cable - fan power
W5	16500-61605	1	Cable - front panel to color module

HP 16500B Replaceable Parts

Ref. Des.	HP Part Number	QTY	Description
W6	16500-61606	1	Cable - power supply to color module
W8	16500-61611	1	Cable - hard drive (40 cond)
W9	16500-61612	1	Cable - hard drive power
W10	16500-61613	1	Cable - CRT 10/40 (10 cond/40 pin, CRT to CPU)
Front-Panel Assembly Parts			
A2	16500-66512	1	Board assembly - front panel
H1	0515-0372	9	MSPH M3 8 SMS10
H10	0535-0106	8	Nut - sheetmetal (clips)
MP1	16500-40203	1	Front panel
MP5	16500-00601	1	Static shield
MP17	16500-42202	1	Touch screen bezel
MP18	16500-47402	1	RPG knob
MP40	16500-94311	1	Front panel label
MP41	16500-47401	2	CRT control knob
MP42	5041-4944	1	Keycap
MP43	16500-44701	1	Switch spacer (power switch)
Miscellaneous			
	16500-40502		Filler panel
	01650-63202	1	RS-232C loopback connector

HP 16500L Replaceable Parts

Refer to the *HP 16500L Administrator's and Service Guide*.

HP 16501A Exploded View and Replaceable Parts

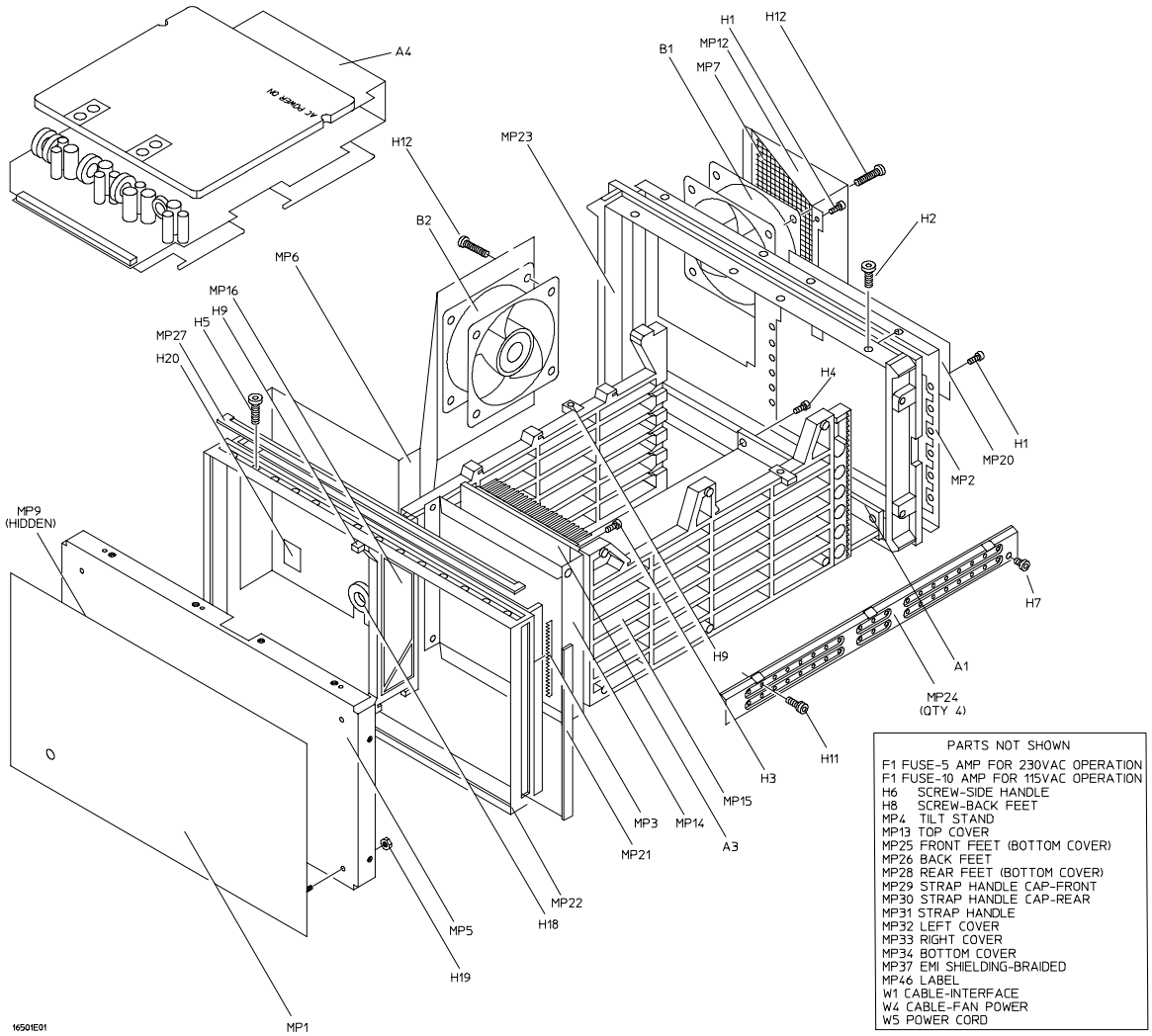

Exploded view of the HP 16501A

HP 16501A Replaceable Parts

Ref. Des.	HP Part Number	QTY	Description
Exchange Assemblies			
A4	16500-69500		Power supply assembly (exchange)
External Parts			
F1	2110-0010		
F1	2110-0395		
MP1	16501-00201	1	Front-panel
MP2	16501-00203	1	Rear panel
MP3	0363-0125	4	FRI strip-fingers (top and bottom covers)
MP4	1460-1345	2	Tile stand
MP5	16501-00202	1	Sub-panel
MP7	16500-00603	1	Fan screen (rear)
MP12	16500-01207	1	Fan shroun (rear)
MP13	16500-04102	1	Top cover
MP21	5001-0541	2	Side trim-front frame
MP22	5021-8407	1	Frame-front
MP23	5021-5808	1	Frame-rear
MP24	5021-5837	4	Strut-corner
MP25	5041-8801	2	Feet-front (bottom cover)
MP26	54110-40502	4	Feet-back
MP27	5041-8802	1	Top trim strip-frame
MP28	5041-8822	2	Feet-rear (bottom cover)
MP29	5041-8819	1	Strap handle cap-front
MP30	5041-8820	1	Strap handle cap-rear
MP31	5062-3704	1	Strap handle
MP32	5062-3847	1	Cover-left side (with handle)
MP33	5062-3822	1	Cover-right side (without handle)
MP34	5062-3747	1	Cover-bottom
MP37	8160-0551	6	EMI shielding-braided
W5	8120-1521	1	Power cord-United States (7.5 ft)
Electrical Assemblies			
A1	16501-66501	1	Expansion interface board
A3	16500-66501	1	Mother board
A4	0950-1853	1	Power supply assembly
B1	3160-0429	2	Fan-tubeaxial
B2	3160-0429		Fan-tubeaxial
W1	98735-61601	1	Cable assembly-interface
W2	16501-61604	1	Cable assembly-ribbon (mother board to expansion interface board)
W3	16501-61603	1	Cable assembly-LED
W4	16500-61604	1	Cable-fan power

HP 16501A Replaceable Parts

Ref. Des.	HP Part Number	QTY	Description
Internal Parts			
H1	0515-0372	19	Screw M3 X 0.5 8MM-LG
H2	0515-0433	12	Screw M4 X 0.8 15MM-LG
H3	0515-0435	6	Screw M4 X 0.7 14MM-LG
H4	0515-0664	2	Screw M3 X 0.5 12MM-LG
H5	0515-0943	14	Screw M4 X 0.7 12MM-LG
H6	0515-1384	2	Screw M5 X 0.8 10MM-LG
H7	0515-1403	16	Screw M4 X 0.7 6MM-LG 90-DEG FH
H8	0515-1444	4	Screw M3.5 X 0.6 25.4MM-LG (back Feet)
H9	0535-0105	4	Nut Sheet Metal M4
H11	0624-0520	9	Screw TPG 6-19 .5-IN-LG
H12	2510-0332	8	Screw M3 0.5 X 20 (fan)
H18	0400-0001	2	Grommet
H19	0535-0031	6	Nut
H20	1400-0611	1	Cable clamp
MP6	16501-01201	1	Fan bracket
MP8	16501-40501	1	Module panel (expansion interface board)
MP9	1400-0560	1	CL-SET-LED-MTG (LED clamp set)
MP14	16500-04701	1	Strut-mother board
MP15	16500-23101	1	Card guide-side
MP16	16500-23102	1	Card guide-center
MP20	16500-61202	1	Power supply cover-rear panel
MP46	16501-94301	1	Label-ID (expansion interface board)
Miscellaneous			
	16500-40502		Filler panel

8

Block-Level Theory 8–3

The HP 16500B Logic Analysis System 8–3
The Microprocessor Board 8–6

The Power-Up Routine 8–9

The Power-Up Screen 8–9
Power-Up Self-Tests 8–10
Power-Up Tasks 8–10
The System Configuration Menu 8–12

Self-Tests Description 8–13

Power-Up Self Tests 8–13
Functional Performance Verification Tests 8–15

HP-IB 8–18

RS-232C 8–19

Theory of Operation

Theory of Operation

This chapter tells the theory of operation for the logic analysis system and describes the self-tests. The information in this chapter is to help you understand how the logic analysis system operates and what the self-tests are testing. This information is not intended for component-level repair.

Block-Level Theory

The block-level theory is divided into two parts: theory for the logic analysis system and theory for the microprocessor board. A block diagram is shown with each theory.

The HP 16500B Logic Analysis System

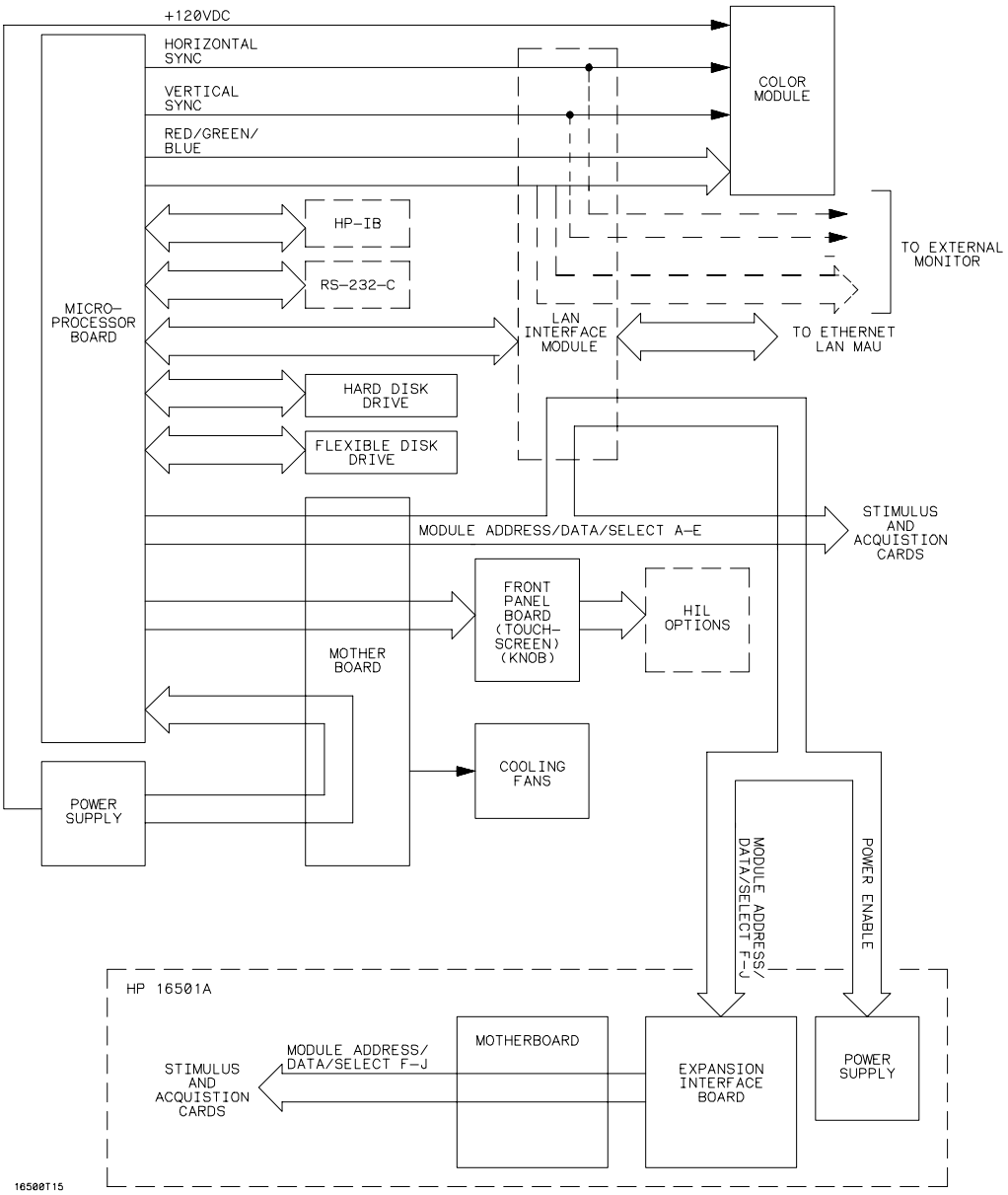

The Logic Analysis System

System Overview Theory

HP 16500B

The HP 16500B is the mainframe for the Logic Analysis System.

Microprocessor Board The microprocessor board contains all the interface circuitry for managing data flow between the mainframe components and the optional boards. The microprocessor used is a Motorola 68EC030.

Mother Board Located on the mother board are the intermodule bus and the fan speed control circuit. The mother board consists of seven card slots: five are used for the optional acquisition and stimulus boards, one for the microprocessor board, and one for the power supply. The only active components on the mother board are for the fan speed control circuit. The heat-sensing thermistor for the fan speed control circuit is located on the microprocessor board.

Flexible Drive The flexible disk drive uses 3.5-inch, double-sided, double-density disks. All of the disk drive control circuitry is located on the microprocessor board.

Hard Disk Drive The hard disk drive, located beneath the rear fans, is an 85 Mbyte DOS-formatted high-reliability drive. The disk drive circuitry is located on the microprocessor board and on the hard disk drive assembly.

Color Module The color module display is an eight-plane color system. Each plane has a resolution of 576 pixels by 368 lines. The display is non-interlacing and is refreshed every 1/60 of a second (not synchronized to the ac line). The horizontal and vertical sync signals are generated by the CRT controller located on the microprocessor board. Color information for the display is generated on the microprocessor board. The display RAM and the color palette are also located on the microprocessor board.

Front-Panel Board The front-panel board is based on the Hewlett-Packard Human Interface Link (HP-HIL) and consists of the touchscreen system, the front-panel control knob, the optional mouse, and the optional keyboard. All of the touchscreen and knob circuitry of the HP-HIL is located on the front-panel board and the controller for the link is located on the microprocessor board.

Power Supply The power supply provides the following regulated voltages:

-12.0 Vdc	+5.0 Vdc	+3.5 Vdc
+12.0 Vdc	-5.2 Vdc	-3.25 Vdc
+120 Vdc		

The +120.0 V supply is used only by the color module. Current limiting, overvoltage protection, and thermal shutdown are provided for all supplies.

HP 16501A

The HP 16501A is the expansion frame for the Logic Analysis System. The expansion frame components include the following:

- Expansion Interface Board
- Interface Cable
- Mother Board
- Power Supply

To connect the expansion frame to the mainframe, you must install an HP 16500L interface module into the mainframe. The interface cable connects the expansion frame to the HP 16500L in the mainframe.

The HP 16501A is an extension of the backplane of the HP 16500B mainframe. After you turn on the mainframe, the HP 16500B microprocessor board looks for a HP 16500L interface module. If it is present and if the interface cable connects the two frames, the microprocessor board establishes a link between the backplanes of the two frames, which then are displayed as a ten-slot system.

The HP 16501A power supply is identical to the HP 16500B power supply. When power is applied to the HP 16500B, a relay allows the power supply in the HP 16501A to turn on. An LED on the front-panel indicates that the expansion frame has turned on.

The Microprocessor Board

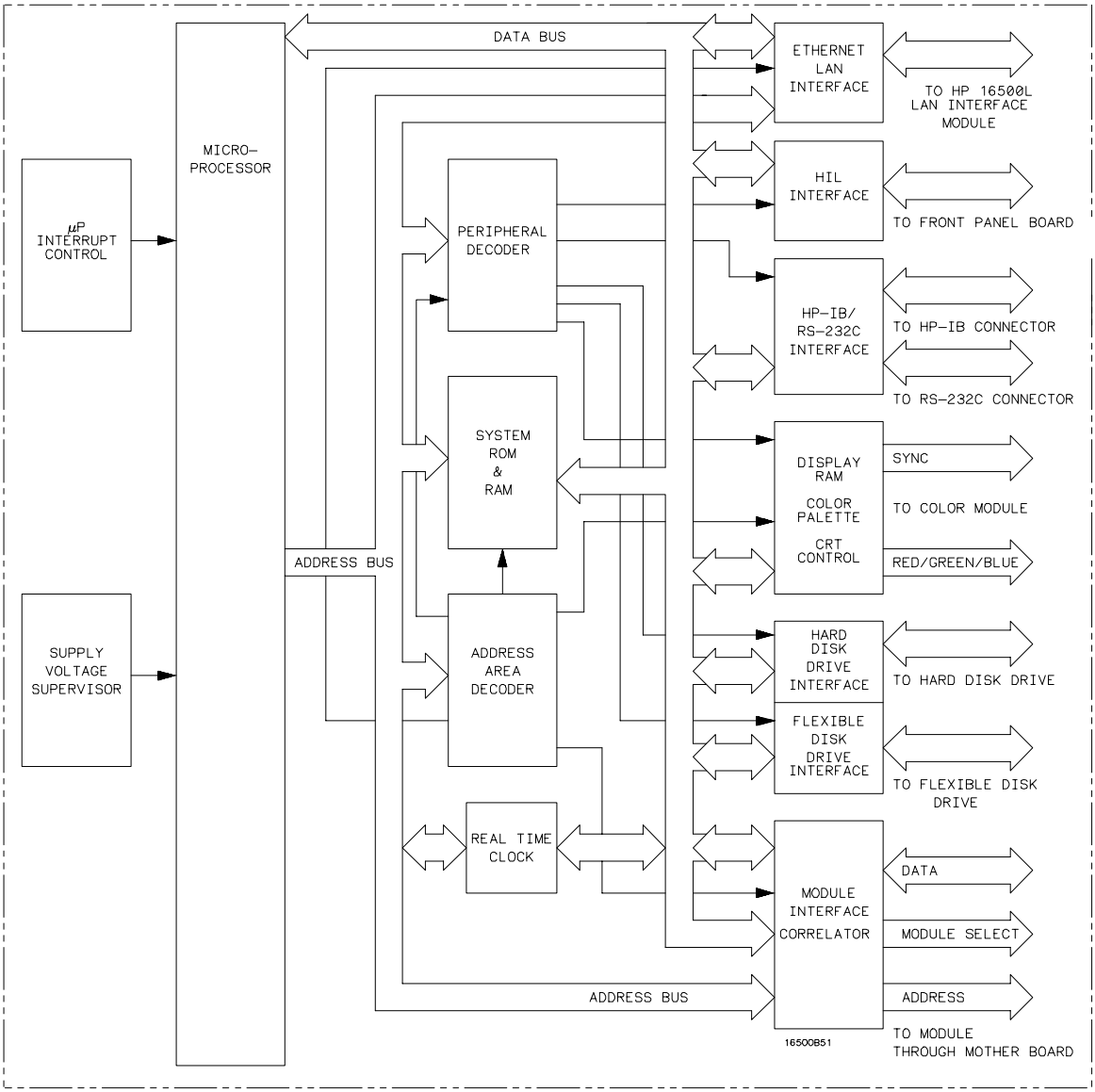

Microprocessor Board Theory

The microprocessor board contains the system memory, all of the interfaces for the mainframe peripherals, the intermodule bus monitor, and the option board module interface.

Microprocessor and System ROM & RAM

The processing engine of the HP 16500B microprocessor board is a Motorola 68EC030 microprocessor. The 68EC030 is supported by 128 Kbytes of ROM and 8 Mbytes of single inline memory module (SIMM) RAM. Stored in ROM are the power-up routines for the mainframe including the power-up self tests and the disk drive instructions. The HIL driver is also resident in system ROM.

Supply Voltage Supervisor

The Supply Voltage Supervisor (SVS) monitors the main power supply bus and ensures a smooth power-up of the microprocessor system. The SVS also ensures a graceful recovery of the system in case the line voltage drops below nominal levels.

During power-up, the SVS asserts the microprocessor L_RESET pin when the supply voltage stabilizes. Because the voltage on the main power supply bus is affected by abnormal line voltages, the SVS asserts the microprocessor L_HALT pin during a low line voltage condition. When the line voltage returns to a nominal value, the L_RESET pin is then asserted by the SVS and the HP 16500B will reboot.

Interrupt Control

The Interrupt Control circuit manages the interrupt signals asserted by the peripheral devices. When an interrupt is received, the Interrupt Control circuit encodes the interrupt signal from the peripheral device to the microprocessor as a prioritized microprocessor interrupt.

Address Area Decoder and Peripheral Decoder

The mainframe peripheral interfaces link the microprocessor data and address busses with the system peripherals. The system peripherals are then selected by the microprocessor through the address area decoder and peripheral decoder. The peripheral decoder selects all peripherals including the HIL interface, the HP-IB and RS-232C interfaces, the color palette, the hard disk drive interface, and the flexible disk drive interface. The address area decoder enables access to system ROM, the display RAM, peripherals, and the HP 16500L interface module.

Real Time Clock

The Real Time Clock provides time information to the HP 16500B microprocessor system. The time information is used to place a time stamp on files stored on both the hard and flexible disk drives. Time information may also be used by certain option modules to time stamp acquired data. For more information regarding the option modules, refer to the User's Guide of the specific module.

Ethernet LAN Interface

Using line drivers, the Ethernet LAN Interface links the microprocessor address and data bus with the LAN controller IC on the HP 16500L Interface Module. Consult the HP 16500L Administrator's and Service Guide for more information regarding the HP 16500L Interface Module.

HIL Interface

The Hewlett-Packard Human Interface Link (HP-HIL) is the interface between the microprocessor and the HP 16500B front panel. In the write mode, the interface controller serializes the 8-bit data and transmits the data to the devices on the link. In the read mode, the data is fed to the interface controller in serial format and to the microprocessor in parallel format.

HP-IB and RS-232C Interface

The HP 16500B interfaces to HP-IB as defined by IEEE Standard 488.2. The interface consists of two octal transceivers and an HP-IB controller. The controller relieves the microprocessor of the task of maintaining HP-IB protocol. The two transceivers provide data and control signal transfer between the bus and the controller.

The RS-232C interface is compatible with standard RS-232C protocol. The interface consists of a controller, an input buffer and an output buffer. The controller serializes parallel data from the microprocessor for transmission. In the receive mode, the controller converts incoming serial data to parallel data for the microprocessor. The controller also generates all the different baud rates and formats available with the mainframe. The input and output buffers transfer data and control signals to and from the RS-232C communication lines.

Display RAM, Color Palette, and CRT Control

The HP 16500B CRT display is driven by a Color Palette and CRT Control supported by 256 KBytes of video RAM. A single RAMDAC functions as the Color Palette for the eight-plane color monitor. RGB signals are provided by the RAMDAC. The RAMDAC sends an analog signal of 0.0 to -1.0 Volts for each of the primary colors (Red, Blue, Green) to the color module. Horizontal and vertical sync signals are provided by a CRT controller.

Hard Disk Drive Interface

The Hard Disk Drive Interface is made up of two octal transceivers and three buffers. The octal transceivers link the hard disk drive's 16-bit data I/O port with the microprocessor data bus. The buffers link the hard disk drive's control signals with both the address bus of the microprocessor and the peripheral interface signals so that the hard disk drive resides at a virtual address in read and write modes. The hard disk drive controller resides on the hard disk drive.

Flexible Disk Drive Interface

The main components of the Flexible Disk Drive Interface are the disk drive controller and buffers. The disk drive controller provides the interface between the microprocessor and the flexible disk drive. The controller also performs all functions necessary to write or read data to or from the disks. Data directed to the disk drive from the microprocessor is serialized by the disk drive controller.

The buffers link the microprocessor data bus with certain flexible disk drive control signals. The flexible disk drive informs the microprocessor through the data bus whether a flexible disk has been changed and whether the flexible disk drive is ready to read from or write to a flexible disk. The microprocessor can also inform the flexible disk drive to format a flexible disk with a high-density format.

Module Interface and Correlator

The Module Interface provides microprocessor access to the acquisition and stimulus option modules that are plugged into the mainframe. The Correlator provides the means for time-aligning module trace data on the mainframe display.

The Power-Up Routine

When power is applied to the HP 16500B Logic Analysis System mainframe, a series of tasks called the power-up routine is performed to initialize and to verify operation of the mainframe. The mainframe monitor reports the progress and status of the power-up routine. Each of the tasks of the power-up routine is added to the monitor display as the task is being performed.

The following figure shows all of the tasks and possible status reporting fields that can be displayed on the monitor.

```
(c) COPYRIGHT 1992 HEWLETT-PACKARD COMPANY          HP 16500B V01.00 *

PERFORMING POWER-UP SELF-TESTS
        passed      ROM Test
        passed      RAM Test
        passed      Interrupt Test
        passed      Display Test
        passed      HIL Controller Test
        passed      Front Panel Test
        passed      Touchscreen Test
        passed      Correlator Test
        passed      Hard Disk Test
        passed      Floppy Disk Test

LOADING SYSTEM FILE                          SYSTEM DISK NOT FOUND
                 FATAL ERRORS ENCOUNTERED, BOOT HALTED
LOADING MODULE FILES

LOADING SOFTWARE OPTIONS

INITIALIZING AND CALIBRATING MODULES

AUTOLOADING CONFIGURATIONS
```

The Power-Up Screen

Model Number and ROM Version

The field in the upper right corner of the display shows the mainframe model number and the version of ROM installed on the CPU board. The ROM version number is important because the ROM code must be compatible with the version of the operating system which is stored on the hard disk drive. The ROM and operating system versions are compatible when the operating system version number is the same as or higher than the ROM version number.

"*"

The "*" next to the ROM version number indicates that one of the disk drives is spinning. The "*" only appears when the boot code in ROM accesses a disk drive.

Power-Up Self-Tests

All of the power-up self tests are performed to verify the operation of the HP 16500B mainframe. If any of the self-tests fail, then the power-up routine is halted and the FATAL ERRORS ENCOUNTERED, BOOT HALTED message appears.

For more information about the individual self-tests, refer to "Self-Tests Description" later in this chapter.

If any power-up self-test fails, refer to chapter 5, "Troubleshooting."

Power-Up Tasks

During the power-up routine, messages on the screen display tasks that are being performed. The following paragraphs explain the tasks.

Loading System File

The operating system of the HP 16500B mainframe is being uploaded from the disk drive into system RAM.

SYSTEM DISK NOT FOUND appears only when the mainframe operating system cannot be found on the hard disk drive. The HP 16500B mainframe power-up routine will not go any further until a mainframe operating system is present and is recognized. In this case, remove power from the instrument and install the flexible disk containing the mainframe operating system in the flexible disk drive. When the System Configuration menu appears, the hard disk drive directory can be checked to see if the mainframe operating system is present and recognized and has the correct version number.

Loading Module Files

The operating system of each of the installed modules is being uploaded from the disk drive into system RAM.

The module operating systems are loaded beginning with the module in slot A, the top-most module. Then, the operating system of the module in slot B is loaded, and so on. Consequently, only the operating systems of the installed modules will be loaded into RAM.

The operating systems of modules not installed will not be uploaded from the disk drive.

The System Configuration menu will show if an installed module did not have its operating system loaded. The message UNRECOGNIZED MODULE appears in place of the module name next to the slot designations on the left side of the System Configuration menu.

Loading Software Options

Software options, for example the System Performance Analysis package, are being loaded into system RAM.

The Configuration menu of the module using the software options will show if the software option was installed. If the option was installed, it will appear in the module configuration menu pop-up. Refer to the User's Guide the software option for more information.

Initializing and Calibrating Modules

The installed modules are initialized and stored calibration factors are uploaded from either the disk drive or module NV-RAM into system RAM. The configuration menu of the module using the calibration factors will show if the calibration factors have been successfully loaded. In some cases, a message appears the first time the module is entered. In other cases, the operation of the module changes until a software calibration is performed to reload calibration factors. Refer to the User's Guide and Service Guide of the individual modules for more information.

Autoloading Configurations

The configuration file autoload flag was detected on the disk and configuration files are being loaded into the modules. The autoload flag was set during a previous session with the HP 16500B Logic Analysis System. Usually a configuration is autoloaded as a shortcut if the module configuration file is used repeatedly.

The System Configuration Menu

When the power-up routine is complete and the HP 16500B is operational, the System Configuration menu is displayed. The names of the installed modules appear in fields on the left side of the display. The fields correspond to the slot into which the module is installed.

UNRECOGNIZED MODULE

If a module field appears with the label UNRECOGNIZED MODULE, then the operating system of the module was not uploaded from the disk drive into system RAM. One of three things can cause an unrecognized module: the operating system file is not on the disk drive, the operating system file is corrupted, or there is not enough RAM memory in the mainframe.

Insufficient RAM memory shows up as a number of recognized modules grouped together in the lower slots of the mainframe or expansion frame with recognized modules in the upper slots.

Touchscreen power-up test failed

If the touchscreen power-up self test found the touchscreen operation impaired, then a red-bar error message "Touchscreen power-up test failed" appears at the top of the screen. This is not a fatal error and only communicates that the touchscreen will operate with a minimal loss of functionality.

Master Frame

If the label Master Frame appears in a blue field, then an expansion frame is recognized and up to five more modules are present. The modules in the expansion frame can be seen by touching the field labeled Master Frame. If the label Master Frame appears as text only, then the HP 16500B mainframe does not recognize an expansion frame.

Ethernet

If an HP 16500L interface module is installed, the HP 16500B can be configured to work with an Ethernet network. Network statistics can be viewed by touching the field configuration labeled Ethernet in the Communications menu of the System Configuration menu, then touching Ethernet Statistics. Refer to the manuals for the HP 16500L interface module for more information.

Self-Tests Description

The self-tests identify the correct operation of the major sub-systems in the HP 16500B Logic Analysis System mainframe. The self-tests are not intended for component-level diagnostics.

Two types of tests are performed on the HP 16500B mainframe: the power-up self-tests and the functional performance verification tests.

The power-up self-tests are performed when power is applied to the instrument. When the power-up self- tests are completed and the mainframe sub-systems are determined to be operational, the system configuration menu is displayed.

The functional performance verification tests are run using a separate operating system, the performance verification (PV) operating system. The PV operating system resides on the hard disk drive and can be accessed through the System Test menu.

A third type of test, parametric performance verification (parametric PV), is not performed on the HP 16500B mainframe. However, parametric PV is performed on the modules installed in the mainframe. Consult the individual Service Guides for each of the modules for more information about parametric performance verification.

Power-Up Self-Tests

The HP 16500B power-up tests check the mainframe circuitry only. None of the option modules are tested at power-up. The tests run every time power is applied to the instrument and the results of the tests are reported on the screen.

If a disk is not installed in the disk drive, the advisory "no disk" is added to the Flexible Disk Tests.

If any of the self-tests fail, then the power-up routine is halted and the FATAL ERRORS ENCOUNTERED, BOOT HALTED message appears. A failure indicates that one of the mainframe sub-systems is seriously impaired to the point that reliable operation is not possible, or that a sub-systems is non-operational. The mainframe hardware would require servicing before the mainframe can be used.

If any power-up self-test fails, refer to chapter 5, "Troubleshooting."

The power-up tests perform the following circuit checks: ROM Test, RAM Test, Interrupt Test, Display Test, HIL Controller Test, Front-panel Test, Touchscreen Test, Correlator Test, Hard Disk Test, and Flexible Disk Test.

ROM Test

The ROM Test performs a checksum of both ROMs and compares the checksum value to a stored value. The test responses are "passed," "impaired," or "failed." If the message "impaired" is displayed, only one of the ROMs on the microprocessor board is defective. If the message "failed" is displayed, both ROMs are defective. For ROM Test failures, you can suspect a faulty microprocessor board.

RAM Test

The RAM Test performs an abbreviated read/write test at various memory locations. The test returns a pass or fail message. For RAM Test failures, first you can suspect a faulty SIMM module, then you can suspect a faulty microprocessor board.

Interrupt Test

The Interrupt Test checks the microprocessor interrupts (interrupts 1 thorough 7). This test returns a pass or fail message. If any interrupts are active, the test fails. For Interrupt Test failures, you can suspect a faulty microprocessor board.

Display Test

The Display Test checks the display RAM and the CRT controller. During the RAM test, the entire address range is checked. The CRT controller ensures that an End-Of-Frame interrupt is generated. The test will report a fail message if either the display RAMs or the controller tests fail. For Display Test failures, you can suspect a faulty microprocessor board.

HIL Controller Test

The HIL Controller Test checks the HIL interface circuitry on the microprocessor board to verify that the microprocessor board can talk to the front-panel board. This test reports a pass or fail message. For HIL Test failures, you can suspect a faulty microprocessor board.

Front-Panel Test

The Front-Panel Test checks the front-panel circuitry for correct operation and reports a pass or fail message. For Front-Panel Test failures, verify the continuity and connection of the cable from the microprocessor board to the front-panel board. If a problem is not found with the cable, you can suspect a faulty front-panel board.

Touchscreen Test

The Touchscreen Test checks for light pulses between LED (light emitting diode) pairs and returns a pass, fail, or an impair message.

The impair message indicates that the touchscreen is faulty, but the instrument can still be operated. If two to four LED pairs of the touchscreen system are defective, then the impair message is displayed. The touchscreen can still be used to operate the instrument, except for the touch-sensitive areas controlled by the faulty LED pairs.

The fail message indicates that the touchscreen is faulty and cannot be used to operate the instrument. The fail message is displayed if five or more LED pairs of the touchscreen system are defective. If the Touchscreen Test fails, you can still operate the instrument by using a mouse.

If a mouse is connected and the Touchscreen Test fails (meaning there are five or more defective LED pairs), then the impair message is displayed instead of the fail message and the mouse can be used to operate the instrument. To obtain true Touchscreen Test results, disconnect the mouse before performing the test.

For Touchscreen Test failures, clean the screen and the surrounding area and move any objects blocking the screen at power-up. Verify the continuity and connection of the cable from the microprocessor board to the front-panel board. If a problem is not found with the cable and the Touchscreen Test still fails after cleaning the instrument, you can suspect a faulty front-panel board.

Correlator Test

The correlator test verifies that the intermodule bus time correlator on the microprocessor board is functioning properly. If the correlator is functioning, then intermodule measurements can be time-correlated to within 2 ns. This test reports either a pass or fail message. For Correlator Test failures, you can suspect a faulty microprocessor board.

Hard Disk Test

The Hard Disk Test reads the hard disk to see if the format is recognized. If the format is not recognized the test is considered to have failed for the hard disk drive.

Possible problems causing a fail message include the following:

- A damaged or disconnected disk drive data cable.
- A damaged or disconnected disk drive power cable.
- Hard disk drive is not formatted.
- A faulty disk drive.
- Faulty microprocessor interface circuitry to the disk drive.

Flexible Disk Test

The Flexible Disk Test reads the flexible disk to identify the format. If the format cannot be identified, the test is considered to have failed for the disk drive. If a flexible disk cannot be detected, the message "no disk" is displayed instead of the pass or fail message. This power-up disk test only checks a few tracks.

Possible problems causing a fail message include the following:

- A damaged or disconnected disk drive cable.
- Wrong disk formatting or no disk formatting.
- A faulty disk drive.
- Faulty microprocessor interface circuitry to the disk drive.

For Flexible Disk Test failures, verify the continuity and connection of the disk drive cable and use formatted disks.

Functional Performance Verification Tests

The following paragraphs briefly describe each mainframe test. After a test is run, the status advisory for each test changes from UNTESTED to PASSED or FAILED. Except for the Color Display Test and the All System Tests, when a test is selected from the Mainframe Test screen, a test screen for that specific test is displayed.

If a mainframe test fails, refer to chapter 5, "Troubleshooting."

ROM Test

This test checks the mainframe ROM on the microprocessor board. The test computes a checksum for the ROM and compares it to a stored value. For ROM Test failures, you can suspect a faulty microprocessor board.

RAM Test

This test checks the mainframe RAM on the microprocessor board. The test performs a non-destructive pattern write/read at every location. The initial RAM contents are restored after the test. For RAM Test failures, first you can suspect a faulty SIMM module, then you can suspect a faulty microprocessor board.

HP-IB Test

The HP-IB Test checks the basic interface functions of the HP-IB port. Only the internal portions of the port circuitry is tested. For HP-IB Test failures, you can suspect a faulty microprocessor board.

RS-232C Test

This test checks the basic interface functions of the RS-232C port. Both internal and external portions of the port circuitry are tested. In order for the RS-232C test to pass, the RS-232C loopback connector must be installed on the microprocessor board rear panel. For RS-232C Test failures, verify the connection of the RS-232C loopback connector, then you can suspect a faulty microprocessor board.

HIL Test

The HIL Test consists of three parts: the HIL controller test, the front-panel test, and the touchscreen test. All three tests return a pass or a fail message. This test cannot be run repetitively. Every time the Run field is touched the HIL test sequence is repeated.

The HIL controller test checks the control circuitry on the microprocessor board. For HIL controller test failures, you can suspect a faulty microprocessor board.

The front-panel test checks the front-panel circuitry for correct operation. For front-panel test failures, verify the connection and continuity of the front-panel to microprocessor board cable. If a problem is not found with the cable, then you can suspect a faulty front-panel board.

The touchscreen test checks for light pulses between LED (light emitting diode) pairs. For Touchscreen Test failures, clean the screen and the surrounding area and move any objects blocking the screen when you turn on the mainframe. Verify the continuity and connection of the cable from the microprocessor board to the front-panel board. If a problem is not found with the cable and the Touchscreen Test still fails after cleaning the instrument, you can suspect a faulty front-panel board.

Disk Test

This test checks both the flexible disk drive and the hard disk drive. The drive controllers are checked and the correct disk format is verified for both drives. Portions from each sector are read and verified, and a test file is written, read, and then erased. Because track sparing is not implemented, a failure in any sector or track constitutes a failure of the disk drive media.

A failure of the flexible disk drive will occur if:

- A disk is not inserted in the flexible disk drive.
- An unformatted disk is inserted in the flexible disk drive.
- A write-protected disk is inserted in the flexible disk drive.

Possible problems causing a failed message in either the flexible disk drive or hard disk drive include the following:

- A damaged or disconnected disk drive cable.
- Wrong disk formatting or no disk formatting.
- The disk write-protect tab set to the write-protect position.
- A faulty disk drive.
- Faulty microprocessor board interface circuitry to the disk drive.

For Flexible Disk Test failures, verify the continuity and connection of the disk drive cables, use formatted disks, and set the write protect tab on the disks to the unprotected position.

Intermodule Test

The Intermodule Test checks the functions of the intermodule timing correlation. This test fails if there are any connections on the input BNC. For Intermodule Test failures in a mainframe, you can suspect a faulty microprocessor board. For Intermodule Test failures in a mainframe connected to an expansion frame, you can suspect a faulty mainframe interface module.

The Intermodule Test screen shows the mainframe and expansion frame card slots and the card identification code of the module located in each slot.

Color Display Test

The Color Display Test puts screen patterns and color screens on the monitor. This test is mainly used to check for color purity. Usually, the purity problem can be solved using a degaussing coil. If some pixels are not colored, then there is probably a problem with the Display RAM on the microprocessor board. For Color Display Test failures, degauss the display. Refer to chapter 2, "Preparing for Use," for degaussing instructions. If the Color Display Test still fails, you can suspect a faulty microprocessor board or a faulty color display monitor.

Option Board Test

The Option Board Test is used during troubleshooting to check the data and control signals through the HP 16501A expansion frame components. This test also verifies the functionality of the HP 16500L LAN interface module. Refer to the manuals for the HP 16500L for more information about the LAN interface tests.

All System Tests

The All System Test will perform all the tests listed on the screen on the Mainframe Test menu, except for the Color Display Test and the Expander Test. When the tests are complete, the status advisory for each test changes from UNTESTED to PASSED or FAILED. The status advisory for the Color Display Test and for the Expander Test remains UNTESTED and the status advisory for the All System Tests changes from UNTESTED to TESTED.

The Hewlett-Packard Interface Bus (HP-IB) is Hewlett-Packard's implementation of IEEE Standard 488-1978, "Standard Digital Interface for Programming Instrumentation." HP-IB is a carefully defined interface that simplifies the integration of various instruments and computers into systems. The interface makes it possible to transfer messages between two or more HP-IB compatible devices. HP-IB is a parallel bus of 16 active signal lines divided into three functional groups according to function.

Eight signal lines, called data lines, are in the first functional group. The data lines are used to transmit data in coded messages. These messages are used to program the instrument function, transfer measurement data, and coordinate instrument operation. Input and output of all messages, in bit parallel-byte serial form, are also transferred on the data lines. A 7-bit ASCII code normally represents each piece of data.

Data is transferred by means of an interlocking "Handshake" technique which permits data transfer (asynchronously) at the rate of the slowest active device used in that transfer. The data byte control lines coordinate the handshaking and form the second functional group.

The remaining five general interface management lines (third functional group) are used to manage the devices connected to the HP-IB. This includes activating all connected devices at once, clearing the interface, and other operations.

The following figure shows the connections to the HP-IB connector located on the rear panel.

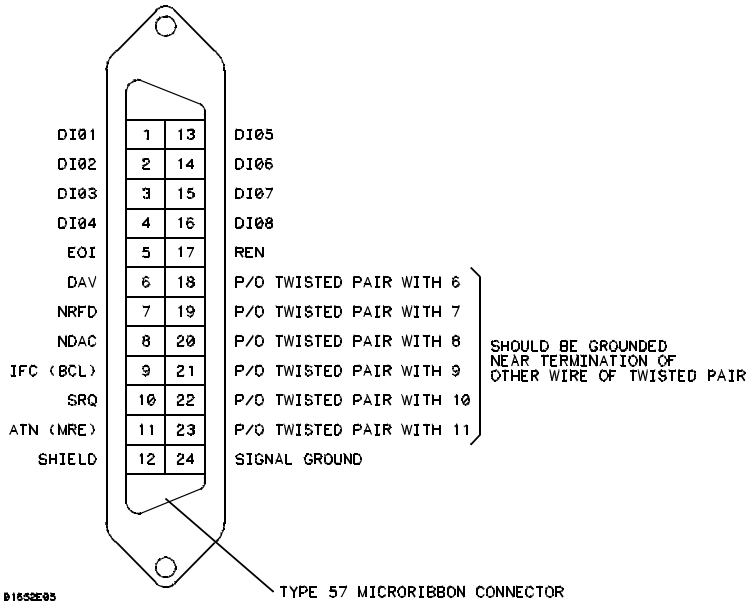

HP-IB Interface Connector

The logic analysis system interfaces with RS-232C communication lines through a standard 25 pin D connector. The logic analysis system is compatible with RS-232C protocol. When a hardwire handshake method is used, the Data Terminal Ready (DTR) line, pin 20 on the connector, is used to signal if space is available for more data in the logical I/O buffer. Pin outs of the RS-232C connectors are listed in the following table.

RS-232C Signal Definitions

Pin Number	Function	RS-232C Standard	Signal Direction and Level
1	Protective Ground	AA	Not applicable
2	Transmitted Data (TD)	BA	Data from Mainframe High = Space = "0" = +12 V Low = Mark = "1" = –12 V
3	Received Data (RD)	BB	Data to Mainframe High = Space = "0" = +3 V to +25 V Low = Mark = "1" = –3 V to –25 V
4	Request to Send (RTS)	CA	Signal from Mainframe High = ON = +12 V Low = OFF = –12 V
5	Clear to Send (CTS)	CB	Signal to Mainframe High = ON = +3 V to +12 V Low = OFF = –3 V to –25 V
6	Data Set Ready (DSR)	CC	Signal to Mainframe High = ON = +3 V to +25 V Low = OFF = –3 V to –25 V
7	Signal Ground	AB	Not applicable
8	Data Carrier Detect (DCD)	CF	Signal to Mainframe High = ON = +3 V to +25 V Low = OFF = –3 V to –25 V
20	Data Terminal Ready (DTR)	CD	Signal from Mainframe High = ON = +12 V Low = OFF = –12 V
23	Data Signal Rate Selector	CH/CI	Signal from Mainframe Always High = ON = +12 V

DECLARATION OF CONFORMITY

according to ISO/IEC Guide 22 and EN 45014

Manufacturer's Name: Hewlett-Packard Company

Manufacturer's Address: 1900 Garden of the Gods Road
Colorado Springs , CO 80901
U.S.A.

declares, that the product

Product Name: Logic Analyzer

Model Number(s): HP 16500B/16501A/16500L

Product Options: All

conforms to the following product specifications:

Safety: IEC 348 / HD 401
UL 1244
CSA-C22.2 No. 231 (Series-M89)

EMC: CISPR 11:1990 /EN 55011 (1991): Group 1 Class A
IEC 801-2:1991 /EN 50082-1 (1992): 4 kV CD, 8 kV AD
IEC 801-3:1984 /EN 50082-1 (1992): 3 V/m
IEC 801-4:1988 /EN 50082-1 (1992): 1 kV

Supplementary Information:
The product herewith complies with the requirements of the Low Voltage Directive 73/23/EEC and the EMC Directive 89/336/EEC.

Colorado Springs, March 11, 1993

European Contact: Your local Hewlett-Packard Sales and Service Office or Hewlett-Packard GmbH, Department ZQ / Standards Europe, Herrenberger Straße 130, D-7030 Böblingen (FAX: +49-7031-144195)

© Copyright Hewlett-Packard Company 1987-1994

All Rights Reserved.

Reproduction, adaptation, or translation without prior written permission is prohibited, except as allowed under the copyright laws.

Restricted Rights Legend

Use, duplication, or disclosure by the U.S. Government is subject to restrictions set forth in subparagraph (C) (1) (ii) of the Rights in Technical Data and Computer Software Clause in DFARS 252.227-7013. Hewlett-Packard Company, 3000 Hanover Street, Palo Alto, CA 94304 U.S.A.
Rights for non-DOD U.S. Government Departments and Agencies are set forth in FAR 52.227-19(c)(1,2).

Document Warranty

The information contained in this document is subject to change without notice.

Hewlett-Packard makes no warranty of any kind with regard to this material, including, but not limited to, the implied warranties of merchantability or fitness for a particular purpose.

Hewlett-Packard shall not be liable for errors contained herein or for damages in connection with the furnishing, performance, or use of this material.

Safety

This apparatus has been designed and tested in accordance with IEC Publication 348, Safety Requirements for Measuring Apparatus, and has been supplied in a safe condition. This is a Safety Class I instrument (provided with terminal for protective earthing). Before applying power, verify that the correct safety precautions are taken (see the following warnings). In addition, note the external markings on the instrument that are described under "Safety Symbols."

Warning

- Before turning on the instrument, you must connect the protective earth terminal of the instrument to the protective conductor of the (mains) power cord. The mains plug shall only be inserted in a socket outlet provided with a protective earth contact. You must not negate the protective action by using an extension cord (power cable) without a protective conductor (grounding). Grounding one conductor of a two-conductor outlet is not sufficient protection.
- Only fuses with the required rated current, voltage, and specified type (normal blow, time delay, etc.) should be used. Do not use repaired fuses or short-circuited fuseholders. To do so could cause a shock of fire hazard.
- Service instructions are for trained service personnel. To avoid dangerous electric shock, do not perform any service unless qualified to do so. Do not attempt internal service or adjustment unless another person, capable of rendering first aid and resuscitation, is present.
- If you energize this instrument by an auto transformer (for voltage reduction), make sure the common terminal is connected to the earth terminal of the power source.
- Whenever it is likely that the ground protection is impaired, you must make the instrument inoperative and secure it against any unintended operation.
- Do not operate the instrument in the presence of flammable gasses or fumes. Operation of any electrical instrument in such an environment constitutes a definite safety hazard.
- Do not install substitute parts or perform any unauthorized modification to the instrument.
- Capacitors inside the instrument may retain a charge even if the instrument is disconnected from its source of supply.
- Use caution when exposing or handling the CRT. Handling or replacing the CRT shall be done only by qualified maintenance personnel.

Safety Symbols

Instruction manual symbol: the product is marked with this symbol when it is necessary for you to refer to the instruction manual in order to protect against damage to the product.

Hazardous voltage symbol.

Earth terminal symbol: Used to indicate a circuit common connected to grounded chassis.

WARNING

The Warning sign denotes a hazard. It calls attention to a procedure, practice, or the like, which, if not correctly performed or adhered to, could result in personal injury. Do not proceed beyond a Warning sign until the indicated conditions are fully understood and met.

CAUTION

The Caution sign denotes a hazard. It calls attention to an operating procedure, practice, or the like, which, if not correctly performed or adhered to, could result in damage to or destruction of part or all of the product. Do not proceed beyond a Caution symbol until the indicated conditions are fully understood or met.

Hewlett-Packard
P.O. Box 2197
1900 Garden of the Gods Road
Colorado Springs, CO 80901

Product Warranty

This Hewlett-Packard product has a warranty against defects in material and workmanship for a period of one year from date of shipment. During the warranty period, Hewlett-Packard Company will, at its option, either repair or replace products that prove to be defective.

For warranty service or repair, this product must be returned to a service facility designated by Hewlett-Packard.

For products returned to Hewlett-Packard for warranty service, the Buyer shall prepay shipping charges to Hewlett-Packard and Hewlett-Packard shall pay shipping charges to return the product to the Buyer. However, the Buyer shall pay all shipping charges, duties, and taxes for products returned to Hewlett-Packard from another country.

Hewlett-Packard warrants that its software and firmware designated by Hewlett-Packard for use with an instrument will execute its programming instructions when properly installed on that instrument. Hewlett-Packard does not warrant that the operation of the instrument software, or firmware will be uninterrupted or error free.

Limitation of Warranty

The foregoing warranty shall not apply to defects resulting from improper or inadequate maintenance by the Buyer, Buyer-supplied software or interfacing, unauthorized modification or misuse, operation outside of the environmental specifications for the product, or improper site preparation or maintenance.

No other warranty is expressed or implied. Hewlett-Packard specifically disclaims the implied warranties of merchantability or fitness for a particular purpose.

Exclusive Remedies

The remedies provided herein are the buyer's sole and exclusive remedies. Hewlett-Packard shall not be liable for any direct, indirect, special, incidental, or consequential damages, whether based on contract, tort, or any other legal theory.

Assistance

Product maintenance agreements and other customer assistance agreements are available for Hewlett-Packard products.

For any assistance, contact your nearest Hewlett-Packard Sales Office.

Certification

Hewlett-Packard Company certifies that this product met its published specifications at the time of shipment from the factory. Hewlett-Packard further certifies that its calibration measurements are traceable to the United States National Institute of Standards and Technology, to the extent allowed by the Institute's calibration facility, and to the calibration facilities of other International Standards Organization members.

About this edition

This is the first edition of the *HP 16500B/16501A Logic Analysis Service Guide.*

Publication number 16500-97011

Printed in USA.

Edition dates are as follows:

First edition, August 1994

New editions are complete revisions of the manual. A software or firmware code may be printed before the date. This code indicates the version level of the software or firmware of this product at the time the manual or update was issued. Many product updates do not require manual changes; and, conversely, manual corrections may be done without accompanying product changes. Therefore, do not expect a one-to-one correspondence between product updates and manual updates.